MITSUBISHI ELECTRIC

Changes for the Better

for a greener tomorrow

AIR CONDITIONING SYSTEMS

Mr.Slim S series

DATA BOOK

MODEL

SLZ-M15-60FA
SEZ-M25-71DA
SEZ-M25-71DAL
SUZ-M25-71VA
SUZ-KA25-71VA6

S series Model List

Combination Table.....B-2

B.1 600 × 600 CEILING CASSETTE (SLZ).....B-3
SLZ-M15FA
SLZ-M25FA
SLZ-M35FA
SLZ-M50FA
SLZ-M60FA

B.2 CEILING CONCEALED (SEZ).....B-39
SEZ-M25DA
SEZ-M25DAL
SEZ-M35DA
SEZ-M35DAL
SEZ-M50DA
SEZ-M50DAL
SEZ-M60DA
SEZ-M60DAL
SEZ-M71DA
SEZ-M71DAL

B.3 OUTDOOR UNIT (SUZ).....B-81
SUZ-M25VA
SUZ-M35VA
SUZ-M50VA
SUZ-M60VA
SUZ-M71VA
SUZ-KA25VA6
SUZ-KA35VA6
SUZ-KA50VA6
SUZ-KA60VA6
SUZ-KA71VA6

S series model
Combination Table

Models			Inverter Model									
Type			Heat pump									
Refrigerant			R32					R410A				
Type		Outdoor unit / Indoor unit	SUZ-M25VA	SUZ-M35VA	SUZ-M50VA	SUZ-M60VA	SUZ-M71VA	SUZ-KA25VA6	SUZ-KA35VA6	SUZ-KA50VA6	SUZ-KA60VA6	SUZ-KA71VA6
600×600 Ceiling cassette SLZ-M series	Heat pump	SLZ-M15FA	for Multi connection only					for Multi connection only				
		SLZ-M25FA	●					●				
		SLZ-M35FA		●					●			
		SLZ-M50FA			●					●		
		SLZ-M60FA				●					●	
Ceiling concealed SEZ-KD series	Heat pump	SEZ-M25DA	●					●				
		SEZ-M25DAL	●					●				
		SEZ-M35DA		●					●			
		SEZ-M35DAL		●					●			
		SEZ-M50DA			●					●		
		SEZ-M50DAL			●					●		
		SEZ-M60DA				●					●	
		SEZ-M60DAL				●					●	
		SEZ-M71DA					●					●
		SEZ-M71DAL					●					●

B.1 600×600 CEILING CASSETTE (SLZ)

B.1.1 SPECIFICATIONS B-4
B.1.1.1 R32 type B-4
B.1.1.2 R410A type B-5
B.1.2 OUTLINES AND DIMENSIONS B-6
B.1.2.1 INDOOR UNIT B-6
B.1.2.2 WIRED REMOTE CONTROLLER B-7
B.1.2.3 WIRELESS REMOTE CONTROLLER B-8
B.1.3 WIRING DIAGRAM B-10
B.1.4 REFRIGERANT SYSTEM DIAGRAM B-11
B.1.5 PERFORMANCE DATA B-12
B.1.5.1 R32 type B-12
B.1.5.2 R410A type B-21
B.1.6 4-WAY AIR FLOW SYSTEM B-30
B.1.7 NOISE CRITERIA CURVES B-32
B.1.8 OUTLET AIR SPEED AND COVERAGE RANGE B-33
B.1.9 CENTER OF GRAVITY POSITION B-33
B.1.10 REMOTE CONTROLLER B-34
B.1.10.1 WIRELESS REMOTE CONTROLLER B-34
B.1.11 TEMPERATURE AND AIRFLOW DISTRIBUTIONS B-36

B.1.1 SPECIFICATIONS

B.1.1.1 R32 type

Model Name	Indoor Unit				SLZ-M15FA	SLZ-M25FA	SLZ-M35FA	SLZ-M50FA	SLZ-M60FA
	Outdoor Unit				for Multi connection	SUZ-M25VA	SUZ-M35VA	SUZ-M50VA	SUZ-M60VA
Power Supply				Source	Outdoor power supply				
	Out			V	230	230	230	230	230
				Phase	Single	Single	Single	Single	Single
				Hz	50	50	50	50	50
	In			V	-	-	-	-	-
				Phase	-	-	-	-	-
				Hz	-	-	-	-	-
Refrigerant					R32	R32	R32	R32	R32
Cooling	Capacity	Rated		kW	-	2.5	3.5	4.6	5.7
		Max.		kW	-	3.2	3.9	5.2	6.3
		Min.		kW	-	1.4	0.7	1.0	1.5
	SHF	Rated			-	0.78	0.72	0.68	0.68
	Total Input	Rated		kW	-	0.650	1.09	1.350	1.670
	EER				-	3.80	3.20	3.40	3.40
	Annual Electricity Consumption			kWh/a	-	139	183	253	321
	SEER				-	6.3	6.7	6.3	6.2
		Energy efficiency class			-	A^{++}	A^{++}	A^{++}	A^{++}
Heating	Capacity	Rated		kW	-	3.2	4.0	5.0	6.4
		Max.		kW	-	4.2	5.0	5.5	7.3
		Min.		kW	-	1.3	1.0	1.3	1.6
	Total Input	Rated		kW	-	0.880	1.07	1.56	2.13
	COP				-	3.61	3.71	3.20	3.00
	Annual Electricity Consumption			kWh/a	-	716	843	1191	1559
	SCOP				-	4.3	4.3	4.2	4.1
		Energy efficiency class			-	A^{+}	A^{+}	A^{+}	A^{+}
Operating Current(max)				A	-	7.0	8.7	13.8	15.2
Indoor Unit	Input	Rated		kW	0.02	0.02	0.02	0.03	0.04
	Operating Current(max)			A	0.17	0.20	0.24	0.32	0.43
	Dimensions		Height	mm	245	245	245	245	245
			Width	mm	570	570	570	570	570
			Depth	mm	570	570	570	570	570
	Weight			kg	15.0	15.0	15.0	15.0	15.0
	Air Volume		Low	m³/min.	6.0	6.5	6.5	7.0	7.5
			Mid2	m³/min.	-	-	-	-	-
			Mid	m³/min.	6.5	7.5	8.0	9.0	11.5
			Hi	m³/min.	7.0	8.5	9.5	11.5	13.0
	External Static Pressure			Pa	-	-	-	-	-
	Sound Level (SPL)		Low	dB(A)	24	25	25	27	32
			Mid2	dB(A)	-	-	-	-	-
			Mid	dB(A)	26	28	30	34	40
			Hi	dB(A)	28	31	34	39	43
	Sound Level (PWL)		Cooling		45	48	51	56	60
Outdoor Unit	Dimensions		Height	mm	-	550	550	714	880
			Width	mm	-	800	800	800	840
			Depth	mm	-	285	285	285	330
	Weight			kg	-	30	35	41	54
	Air Volume	Cooling	Rated	m³/min.	-	36.3	34.3	45.8	50.1
		Heating	Rated	m³/min.	-	34.6	32.7	43.7	50.1
	Sound Level (SPL)	Cooling	Rated	dB(A)	-	45	48	48	49
			Silent	dB(A)	-	-	-	-	-
		Heating	Rated	dB(A)	-	46	48	49	51
	Sound Level (PWL)		Cooling		-	59	59	64	65
	Operating Current(max)			A	-	6.8	8.5	13.5	14.8
	Breaker Size			A	-	10	10	20	20
Ext. Piping	Diameter	Liquid		mm	-	6.35	6.35	6.35	6.35
		Gas		mm	-	9.52	9.52	12.7	15.88
	Max. Length	Out-In		m	-	20	20	30	30
	Max. Height	Out-In	Below Indoor	m	-	12	12	30	30
			Above Indoor	m	-	12	12	30	30
Guranteed Operation Range	Out	Cooling	Upper Limit.	°C	-	+46	+46	+46	+46
			Lower Limit.	°C	-	-10	-10	-15	-15
		Heating	Upper Limit.	°C	-	+24	+24	+24	+24
			Lower Limit.	°C	-	-10	-10	-10	-10

B.1.1.2 R410A type

Model Name	Indoor Unit				SLZ-M15FA	SLZ-M25FA	SLZ-M35FA	SLZ-M50FA	SLZ-M60FA
	Outdoor Unit				for Multi connection	SUZ-KA25VA6	SUZ-KA35VA6	SUZ-KA50VA6	SUZ-KA60VA6
Power Supply				Source	Outdoor power supply				
	Out			V	230	230	230	230	230
				Phase	Single	Single	Single	Single	Single
				Hz	50	50	50	50	50
	In			V	-	-	-	-	-
				Phase	-	-	-	-	-
				Hz	-	-	-	-	-
Refrigerant					R410A	R410A	R410A	R410A	R410A
Cooling	Capacity	Rated		kW	-	2.6	3.5	4.6	5.6
		Max.		kW	-	3.2	3.9	5.2	6.5
		Min.		kW	-	1.5	1.4	2.3	2.3
	SHF	Rated			-	0.78	0.72	0.68	0.68
	Total Input	Rated		kW	-	0.684	0.972	1.394	1.767
	EER				-	3.80	3.60	3.30	3.17
	Annual Electricity Consumption			kWh/a	-	144	188	256	316
	SEER				-	6.3	6.5	6.3	6.2
		Energy efficiency class			-	A^{++}	A^{++}	A^{++}	A^{++}
Heating	Capacity	Rated		kW	-	3.2	4.0	5.0	6.4
		Max.		kW	-	4.2	5.0	6.0	7.4
		Min.		kW	-	1.3	1.7	1.7	2.5
	Total Input	Rated		kW	-	0.886	1.108	1.558	2.278
	COP				-	3.61	3.61	3.21	2.81
	Annual Electricity Consumption			kWh/a	-	716	845	1172	1572
	SCOP				-	4.3	4.3	4.3	4.1
		Energy efficiency class			-	A^{+}	A^{+}	A^{+}	A^{+}
Operating Current(max)				A	-	7.2	8.4	12.3	14.4
Indoor Unit	Input	Rated		kW	0.02	0.02	0.02	0.03	0.04
	Operating Current(max)			A	0.17	0.20	0.24	0.32	0.43
	Dimensions		Height	mm	245	245	245	245	245
			Width	mm	570	570	570	570	570
			Depth	mm	570	570	570	570	570
	Weight			kg	15.0	15.0	15.0	15.0	15.0
	Air Volume		Low	m³/min.	6.0	6.5	6.5	7.0	7.5
			Mid2	m³/min.	-	-	-	-	-
			Mid	m³/min.	6.5	7.5	8.0	9.0	11.5
			Hi	m³/min.	7.0	8.5	9.5	11.5	13.0
	External Static Pressure			Pa	-	-	-	-	-
	Sound Level (SPL)		Low	dB(A)	24	25	25	27	32
			Mid2	dB(A)	-	-	-	-	-
			Mid	dB(A)	26	28	30	34	40
			Hi	dB(A)	28	31	34	39	43
	Sound Level (PWL)		Cooling		45	48	51	56	60
Outdoor Unit	Dimensions		Height	mm	-	550	550	880	880
			Width	mm	-	800	800	840	840
			Depth	mm	-	285	285	330	330
	Weight			kg	-	30	35	54	50
	Air Volume	Cooling	Rated	m³/min.	-	32.6	36.3	44.6	40.9
		Heating	Rated	m³/min.	-	34.7	34.8	44.6	49.2
	Sound Level (SPL)	Cooling	Rated	dB(A)	-	47	49	52	55
			Silent	dB(A)	-	-	-	-	-
		Heating	Rated	dB(A)	-	48	50	52	55
	Sound Level (PWL)		Cooling		-	58	62	65	65
	Operating Current(max)			A	-	7.0	8.2	12.0	14.0
	Breaker Size			A	-	10	10	20	20
Ext. Piping	Diameter	Liquid		mm	-	6.35	6.35	6.35	6.35
		Gas		mm	-	9.52	9.52	12.7	15.88
	Max. Length	Out-In		m	-	20	20	30	30
	Max. Height	Out-In	Below Indoor	m	-	12	12	30	30
			Above Indoor	m	-	12	12	30	30
Guranteed Operation Range	Out	Cooling	Upper Limit.	°C	-	+46	+46	+46	+46
			Lower Limit.	°C	-	-10	-10	-15	-15
		Heating	Upper Limit.	°C	-	+24	+24	+24	+24
			Lower Limit.	°C	-	-10	-10	-10	-10

B.1.2 OUTLINES AND DIMENSIONS

B.1.2.1 INDOOR UNIT

Unit : mm

SLZ-M15FA
SLZ-M25FA
SLZ-M35FA
SLZ-M50FA
SLZ-M60FA

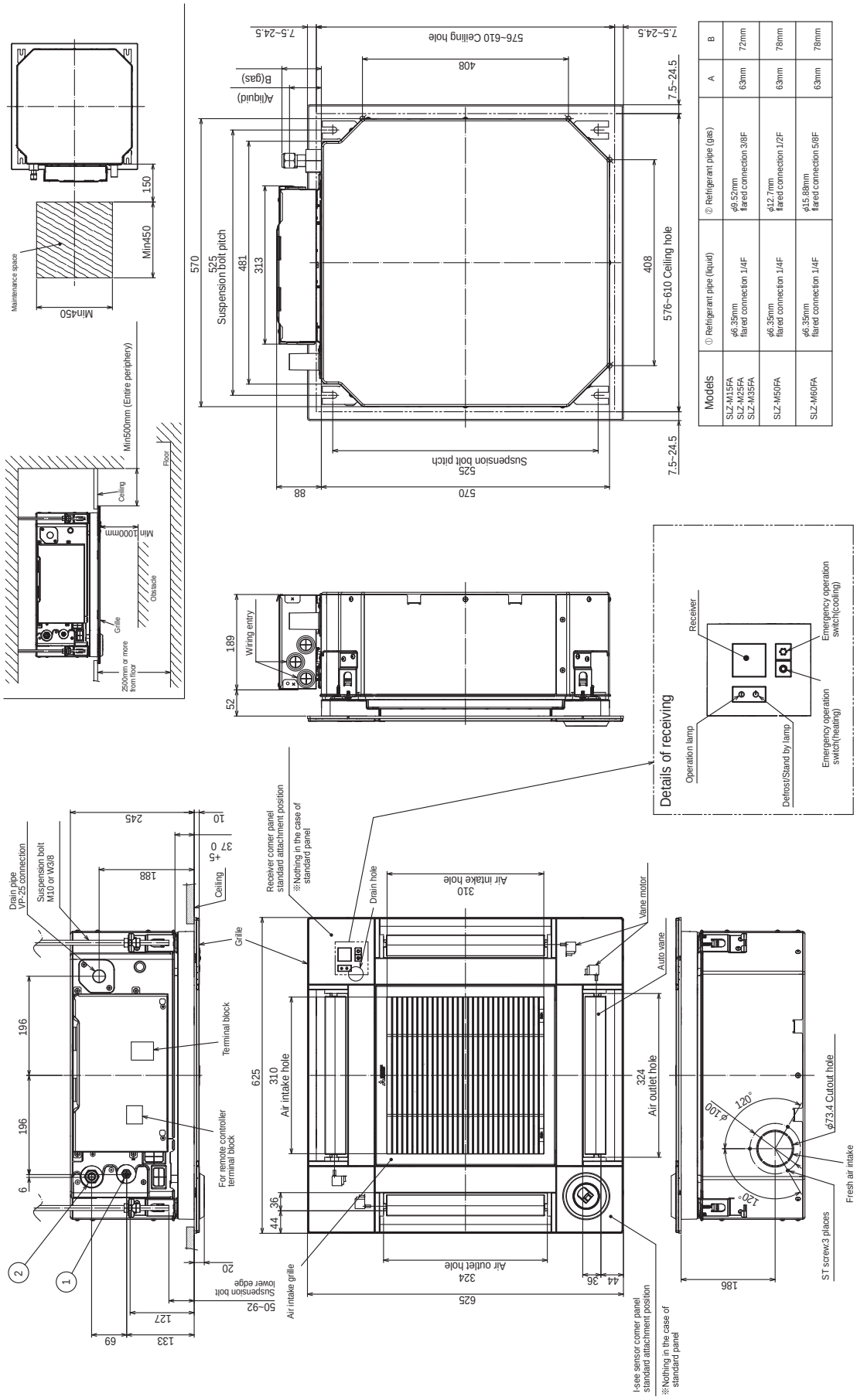

Models	① Refrigerant pipe (liquid)	② Refrigerant pipe (gas)	A	B
SLZ-M15FA SLZ-M25FA SLZ-M35FA	ø6.35mm flared connection 1/4F	ø9.52mm flared connection 3/8F	63mm	72mm
SLZ-M50FA	ø6.35mm flared connection 1/4F	ø12.7mm flared connection 1/2F	63mm	78mm
SLZ-M60FA	ø6.35mm flared connection 1/4F	ø15.88mm flared connection 5/8F	63mm	78mm

B.1.2.2 WIRED REMOTE CONTROLLER(Optional parts)

SLZ-M15FA
SLZ-M25FA
SLZ-M35FA
SLZ-M50FA
SLZ-M60FA

[PAR-40MAA]

Unit : mm[in.]

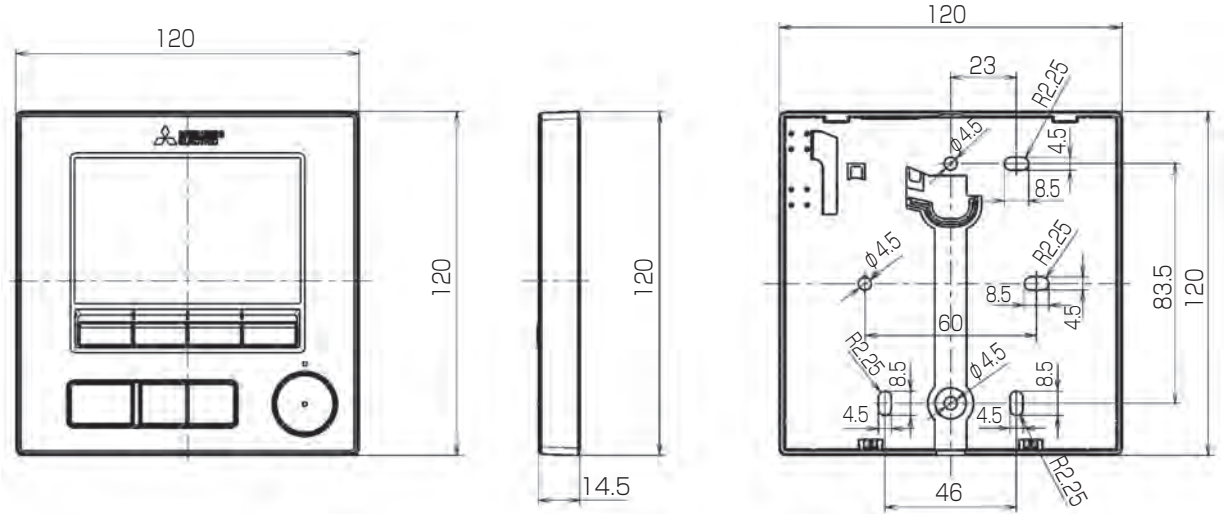

(Front view) (Side view) (Rear view)

B.1.2.3 WIRELESS REMOTE CONTROLLER(Optional parts)

SLZ-M15FA
SLZ-M25FA
SLZ-M35FA
SLZ-M50FA
SLZ-M60FA

Unit : mm

[PAR-SL97A-E]

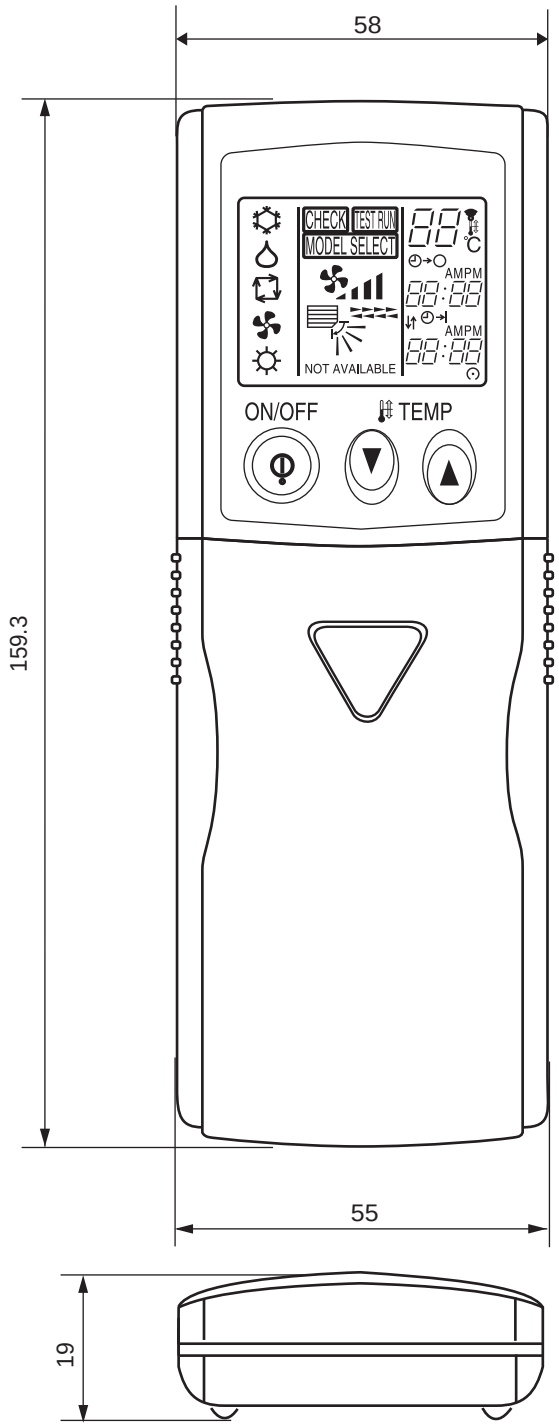

SLZ-M15FA
SLZ-M25FA
SLZ-M35FA
SLZ-M50FA
SLZ-M60FA

Unit : mm

[PAR-SL100A-E]

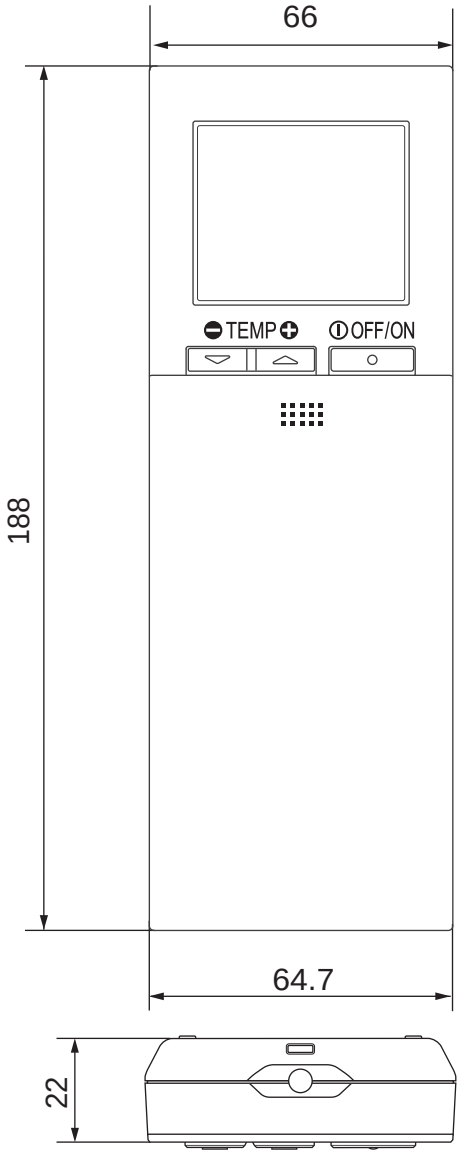

B.1.3 WIRING DIAGRAM

SLZ-M15FA
SLZ-M25FA
SLZ-M35FA
SLZ-M50FA
SLZ-M60FA

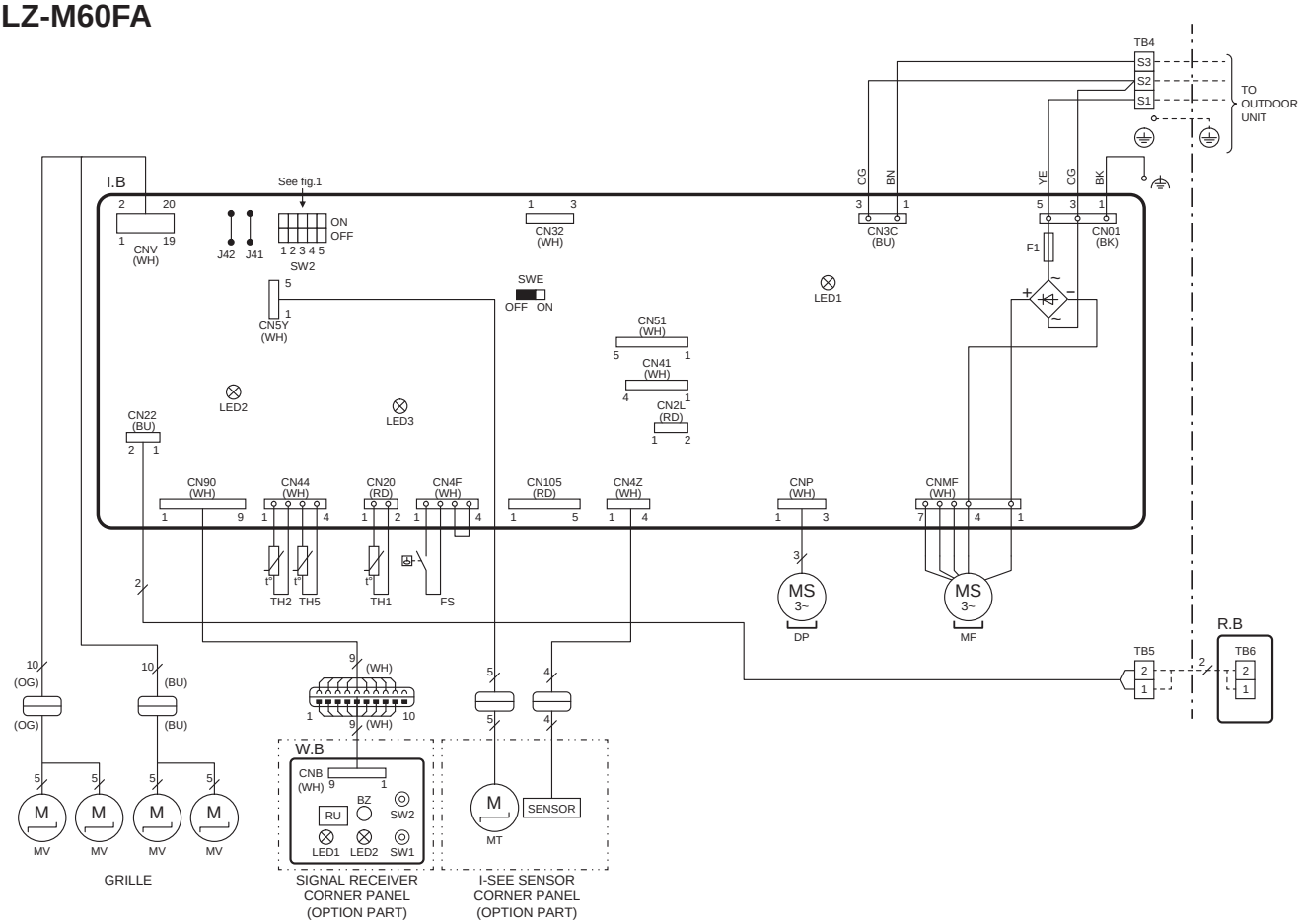

[LEGEND]

SYMBOL			NAME
I.B			INDOOR CONTROLLER BOARD
	CN2L		CONNECTOR (LOSSNAY)
	CN32		CONNECTOR (REMOTE SWITCH)
	CN41		CONNECTOR (HA TERMINAL-A)
	CN51		CONNECTOR (CENTRALLY CONTROL)
	CN105		CONNECTOR (IT)
	F1		FUSE (T6.3AL250V)
	J41		JUMPER WIRE (PAIR NUMBER SETTING WITH
	J42		WIRELESS REMOTE CONTROLLER)
	LED1		POWER SUPPLY (I.B)
	LED2		POWER SUPPLY (WIRED REMOTE CONTROLLER)
	LED3		COMMUNICATION (INDOOR-OUTDOOR)
	SW2		DIP SWITCH (CAPACITY CODE)
	SWE		JUMPER SWITCH (EMERGENCY OPERATION)
DP			DRAIN PUMP
FS			FLOAT SWITCH
MF			FAN MOTOR
MV			VANE MOTOR
TB4			TERMINAL BLOCK (INDOOR/OUTDOOR CONNECTING LINE)
TB5, TB6			TERMINAL BLOCK (REMOTE CONTROLLER TRANSMISSION LINE)
TH1			ROOM TEMP. THERMISTOR
TH2			PIPE TEMP. THERMISTOR (LIQUID)
TH5			CONDENSER / EVAPORATOR TEMP. THERMISTOR
OPTION PART			
	W.B		WIRELESS REMOTE CONTROLLER BOARD
		BZ	BUZZER
		LED1	OPERATION (GREEN)
		LED2	DEFROST/STAND BY (ORANGE)
		RU	RECEIVING UNIT
		SW1	EMERGENCY OPERATION (HEAT)
		SW2	EMERGENCY OPERATION (COOL)
	MT		I-SEE SENSOR MOTOR
	R.B		WIRED REMOTE CONTROLLER

<fig.1>

MODELS	SW2	MODELS	SW2	MODELS	SW2
M15	ON OFF 1 2 3 4 5	M35	ON OFF 1 2 3 4 5	M60	ON OFF 1 2 3 4 5
M25	ON OFF 1 2 3 4 5	M50	ON OFF 1 2 3 4 5		

The black square (■) indicates a switch position.

NOTES:
1. Since the outdoor side electric wiring may change be sure to check the outdoor unit electric wiring for servicing.
2. Indoor and outdoor connecting wires are made with polarities, make wiring matching terminal numbers (S1, S2, S3).
3. Symbols used in wiring diagram are, ▭ ooo :Connector, ▭▭▭ :Terminal (block)
4. For details on how to operate self-diagnosis refer to the technical manuals etc.

B.1.4 REFRIGERANT SYSTEM DIAGRAM

SLZ-M15FA
SLZ-M25FA
SLZ-M35FA
SLZ-M50FA
SLZ-M60FA

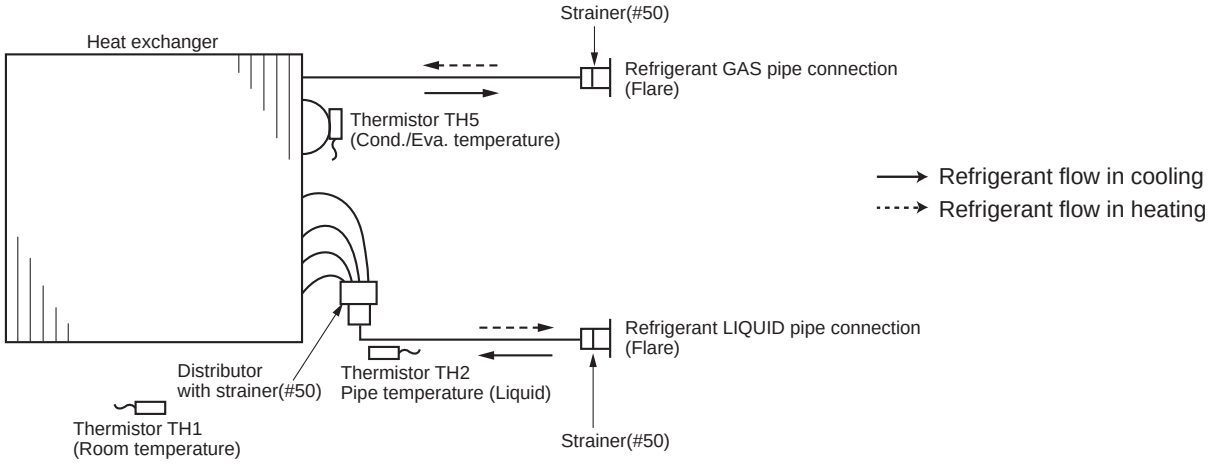

B.1.5 PERFORMANCE DATA

B.1.5.1 R32 type

COOLING operation at Rated frequency
SLZ-M25FA / SUZ-M25VA
CAPACITY : 2.5(kW) INPUT :650(W) SHF :0.78

		OUTDOOR DB(℃)															
INDOOR	INDOOR	21				25				27				30			
DB(℃)	WB(℃)	Q	SHC	SHF	INPUT	Q	SHC	SHF	INPUT	Q	SHC	SHF	INPUT	Q	SHC	SHF	INPUT
21	18	2.94	1.76	0.60	520	2.81	1.69	0.60	546	2.70	1.62	0.60	572	2.60	1.56	0.60	598
21	20	3.06	1.47	0.48	546	2.94	1.41	0.48	579	2.85	1.37	0.48	592	2.75	1.32	0.48	618
22	18	2.94	1.88	0.64	520	2.81	1.80	0.64	546	2.70	1.73	0.64	572	2.60	1.66	0.64	598
22	20	3.06	1.59	0.52	546	2.94	1.53	0.52	579	2.85	1.48	0.52	592	2.75	1.43	0.52	618
22	22	3.19	1.28	0.40	566	3.08	1.23	0.40	601	3.00	1.20	0.40	618	2.88	1.15	0.40	644
23	18	2.94	2.00	0.68	520	2.81	1.91	0.68	546	2.70	1.84	0.68	572	2.60	1.77	0.68	598
23	20	3.06	1.72	0.56	546	2.94	1.65	0.56	579	2.85	1.60	0.56	592	2.75	1.54	0.56	618
23	22	3.19	1.40	0.44	566	3.08	1.35	0.44	601	3.00	1.32	0.44	618	2.88	1.27	0.44	644
24	18	2.94	2.12	0.72	520	2.81	2.03	0.72	546	2.70	1.94	0.72	572	2.60	1.87	0.72	598
24	20	3.06	1.84	0.60	546	2.94	1.76	0.60	579	2.85	1.71	0.60	592	2.75	1.65	0.60	618
24	22	3.19	1.53	0.48	566	3.08	1.48	0.48	601	3.00	1.44	0.48	618	2.88	1.38	0.48	644
24	24	3.35	1.21	0.36	592	3.23	1.16	0.36	624	3.15	1.13	0.36	644	3.05	1.10	0.36	676
25	20	3.06	1.96	0.64	546	2.94	1.88	0.64	579	2.85	1.82	0.64	592	2.75	1.76	0.64	618
25	22	3.19	1.66	0.52	566	3.08	1.60	0.52	601	3.00	1.56	0.52	618	2.88	1.50	0.52	644
25	24	3.35	1.34	0.40	592	3.23	1.29	0.40	624	3.15	1.26	0.40	644	3.05	1.22	0.40	676
26	18	2.94	2.35	0.80	520	2.81	2.25	0.80	546	2.70	2.16	0.80	572	2.60	2.08	0.80	598
26	20	3.06	2.08	0.68	546	2.94	2.00	0.68	579	2.85	1.94	0.68	592	2.75	1.87	0.68	618
26	22	3.19	1.79	0.56	566	3.08	1.72	0.56	601	3.00	1.68	0.56	618	2.88	1.61	0.56	644
26	24	3.35	1.47	0.44	592	3.23	1.42	0.44	624	3.15	1.39	0.44	644	3.05	1.34	0.44	676
26	26	3.45	1.10	0.32	624	3.35	1.07	0.32	657	3.30	1.06	0.32	676	3.20	1.02	0.32	696
27	18	2.94	2.47	0.84	520	2.81	2.36	0.84	546	2.70	2.27	0.84	572	2.60	2.18	0.84	598
27	20	3.06	2.21	0.72	546	2.94	2.12	0.72	579	2.85	2.05	0.72	592	2.75	1.98	0.72	618
27	22	3.19	1.91	0.60	566	3.08	1.85	0.60	601	3.00	1.80	0.60	618	2.88	1.73	0.60	644
27	24	3.35	1.61	0.48	592	3.23	1.55	0.48	624	3.15	1.51	0.48	644	3.05	1.46	0.48	676
27	26	3.45	1.24	0.36	624	3.35	1.21	0.36	657	3.30	1.19	0.36	676	3.20	1.15	0.36	696
28	18	2.94	2.59	0.88	520	2.81	2.48	0.88	546	2.70	2.38	0.88	572	2.60	2.29	0.88	598
28	20	3.06	2.33	0.76	546	2.94	2.23	0.76	579	2.85	2.17	0.76	592	2.75	2.09	0.76	618
28	22	3.19	2.04	0.64	566	3.08	1.97	0.64	601	3.00	1.92	0.64	618	2.88	1.84	0.64	644
28	24	3.35	1.74	0.52	592	3.23	1.68	0.52	624	3.15	1.64	0.52	644	3.05	1.59	0.52	676
28	26	3.45	1.38	0.40	624	3.35	1.34	0.40	657	3.30	1.32	0.40	676	3.20	1.28	0.40	696
29	18	2.94	2.70	0.92	520	2.81	2.59	0.92	546	2.70	2.48	0.92	572	2.60	2.39	0.92	598
29	20	3.06	2.45	0.80	546	2.94	2.35	0.80	579	2.85	2.28	0.80	592	2.75	2.20	0.80	618
29	22	3.19	2.17	0.68	566	3.08	2.09	0.68	601	3.00	2.04	0.68	618	2.88	1.96	0.68	644
29	24	3.35	1.88	0.56	592	3.23	1.81	0.56	624	3.15	1.76	0.56	644	3.05	1.71	0.56	676
29	26	3.45	1.52	0.44	624	3.35	1.47	0.44	657	3.30	1.45	0.44	676	3.20	1.41	0.44	696
30	18	2.94	2.82	0.96	520	2.81	2.70	0.96	546	2.70	2.59	0.96	572	2.60	2.50	0.96	598
30	20	3.06	2.57	0.84	546	2.94	2.47	0.84	579	2.85	2.39	0.84	592	2.75	2.31	0.84	618
30	22	3.19	2.30	0.72	566	3.08	2.21	0.72	601	3.00	2.16	0.72	618	2.88	2.07	0.72	644
30	24	3.35	2.01	0.60	592	3.23	1.94	0.60	624	3.15	1.89	0.60	644	3.05	1.83	0.60	676
30	26	3.45	1.66	0.48	624	3.35	1.61	0.48	657	3.30	1.58	0.48	676	3.20	1.54	0.48	696
31	18	2.94	2.94	1.00	520	2.81	2.81	1.00	546	2.70	2.70	1.00	572	2.60	2.60	1.00	598
31	20	3.06	2.70	0.88	546	2.94	2.59	0.88	579	2.85	2.51	0.88	592	2.75	2.42	0.88	618
31	22	3.19	2.42	0.76	566	3.08	2.34	0.76	601	3.00	2.28	0.76	618	2.88	2.19	0.76	644
31	24	3.35	2.14	0.64	592	3.23	2.06	0.64	624	3.15	2.02	0.64	644	3.05	1.95	0.64	676
31	26	3.45	1.79	0.52	624	3.35	1.74	0.52	657	3.30	1.72	0.52	676	3.20	1.66	0.52	696
32	18	2.94	3.06	1.04	520	2.81	2.93	1.04	546	2.70	2.81	1.04	572	2.60	2.70	1.04	598
32	20	3.06	2.82	0.92	546	2.94	2.70	0.92	579	2.85	2.62	0.92	592	2.75	2.53	0.92	618
32	22	3.19	2.55	0.80	566	3.08	2.46	0.80	601	3.00	2.40	0.80	618	2.88	2.30	0.80	644
32	24	3.35	2.28	0.68	592	3.23	2.19	0.68	624	3.15	2.14	0.68	644	3.05	2.07	0.68	676
32	26	3.45	1.93	0.56	624	3.35	1.88	0.56	657	3.30	1.85	0.56	676	3.20	1.79	0.56	696

Note: Q : Total capacity (kW) SHF : Sensible heat factor D.B.: Dry-bulb temperature
SHC : Sensible heat capacity (kW) INPUT : Total power input (W) W.B.: Wet-bulb temperature

COOLING operation at Rated frequency
SLZ-M25FA / SUZ-M25VA
CAPACITY : 2.5(kW) INPUT :650(W) SHF :0.78

		OUTDOOR DB(℃)											
INDOOR	INDOOR	35				40				46			
DB(℃)	WB(℃)	Q	SHC	SHF	INPUT	Q	SHC	SHF	INPUT	Q	SHC	SHF	INPUT
21	18	2.45	1.47	0.60	637	2.25	1.35	0.60	676	2.08	1.25	0.60	702
21	20	2.58	1.24	0.48	663	2.40	1.15	0.48	696	2.23	1.07	0.48	735
22	18	2.45	1.57	0.64	637	2.25	1.44	0.64	676	2.08	1.33	0.64	702
22	20	2.58	1.34	0.52	663	2.40	1.25	0.52	696	2.23	1.16	0.52	735
22	22	2.73	1.09	0.40	689	2.55	1.02	0.40	728	2.38	0.95	0.40	754
23	18	2.45	1.67	0.68	637	2.25	1.53	0.68	676	2.08	1.41	0.68	702
23	20	2.58	1.44	0.56	663	2.40	1.34	0.56	696	2.23	1.25	0.56	735
23	22	2.73	1.20	0.44	689	2.55	1.12	0.44	728	2.38	1.05	0.44	754
24	18	2.45	1.76	0.72	637	2.25	1.62	0.72	676	2.08	1.49	0.72	702
24	20	2.58	1.55	0.60	663	2.40	1.44	0.60	696	2.23	1.34	0.60	735
24	22	2.73	1.31	0.48	689	2.55	1.22	0.48	728	2.38	1.14	0.48	754
24	24	2.88	1.04	0.36	715	2.70	0.97	0.36	748	2.55	0.92	0.36	780
25	20	2.58	1.65	0.64	663	2.40	1.54	0.64	696	2.23	1.42	0.64	735
25	22	2.73	1.42	0.52	689	2.55	1.33	0.52	728	2.38	1.24	0.52	754
25	24	2.88	1.15	0.40	715	2.70	1.08	0.40	748	2.55	1.02	0.40	780
26	18	2.45	1.96	0.80	637	2.25	1.80	0.80	676	2.08	1.66	0.80	702
26	20	2.58	1.75	0.68	663	2.40	1.63	0.68	696	2.23	1.51	0.68	735
26	22	2.73	1.53	0.56	689	2.55	1.43	0.56	728	2.38	1.33	0.56	754
26	24	2.88	1.27	0.44	715	2.70	1.19	0.44	748	2.55	1.12	0.44	780
26	26	3.03	0.97	0.32	741	2.85	0.91	0.32	774	2.68	0.86	0.32	806
27	18	2.45	2.06	0.84	637	2.25	1.89	0.84	676	2.08	1.74	0.84	702
27	20	2.58	1.85	0.72	663	2.40	1.73	0.72	696	2.23	1.60	0.72	735
27	22	2.73	1.64	0.60	689	2.55	1.53	0.60	728	2.38	1.43	0.60	754
27	24	2.88	1.38	0.48	715	2.70	1.30	0.48	748	2.55	1.22	0.48	780
27	26	3.03	1.09	0.36	741	2.85	1.03	0.36	774	2.68	0.96	0.36	806
28	18	2.45	2.16	0.88	637	2.25	1.98	0.88	676	2.08	1.83	0.88	702
28	20	2.58	1.96	0.76	663	2.40	1.82	0.76	696	2.23	1.69	0.76	735
28	22	2.73	1.74	0.64	689	2.55	1.63	0.64	728	2.38	1.52	0.64	754
28	24	2.88	1.50	0.52	715	2.70	1.40	0.52	748	2.55	1.33	0.52	780
28	26	3.03	1.21	0.40	741	2.85	1.14	0.40	774	2.68	1.07	0.40	806
29	18	2.45	2.25	0.92	637	2.25	2.07	0.92	676	2.08	1.91	0.92	702
29	20	2.58	2.06	0.80	663	2.40	1.92	0.80	696	2.23	1.78	0.80	735
29	22	2.73	1.85	0.68	689	2.55	1.73	0.68	728	2.38	1.62	0.68	754
29	24	2.88	1.61	0.56	715	2.70	1.51	0.56	748	2.55	1.43	0.56	780
29	26	3.03	1.33	0.44	741	2.85	1.25	0.44	774	2.68	1.18	0.44	806
30	18	2.45	2.35	0.96	637	2.25	2.16	0.96	676	2.08	1.99	0.96	702
30	20	2.58	2.16	0.84	663	2.40	2.02	0.84	696	2.23	1.87	0.84	735
30	22	2.73	1.96	0.72	689	2.55	1.84	0.72	728	2.38	1.71	0.72	754
30	24	2.88	1.73	0.60	715	2.70	1.62	0.60	748	2.55	1.53	0.60	780
30	26	3.03	1.45	0.48	741	2.85	1.37	0.48	774	2.68	1.28	0.48	806
31	18	2.45	2.45	1.00	637	2.25	2.25	1.00	676	2.08	2.08	1.00	702
31	20	2.58	2.27	0.88	663	2.40	2.11	0.88	696	2.23	1.96	0.88	735
31	22	2.73	2.07	0.76	689	2.55	1.94	0.76	728	2.38	1.81	0.76	754
31	24	2.88	1.84	0.64	715	2.70	1.73	0.64	748	2.55	1.63	0.64	780
31	26	3.03	1.57	0.52	741	2.85	1.48	0.52	774	2.68	1.39	0.52	806
32	18	2.45	2.55	1.04	637	2.25	2.34	1.04	676	2.08	2.16	1.04	702
32	20	2.58	2.37	0.92	663	2.40	2.21	0.92	696	2.23	2.05	0.92	735
32	22	2.73	2.18	0.80	689	2.55	2.04	0.80	728	2.38	1.90	0.80	754
32	24	2.88	1.96	0.68	715	2.70	1.84	0.68	748	2.55	1.73	0.68	780
32	26	3.03	1.69	0.56	741	2.85	1.60	0.56	774	2.68	1.50	0.56	806

Note: Q : Total capacity (kW)
SHC : Sensible heat capacity (kW)
SHF : Sensible heat factor
INPUT : Total power input (W)
D.B.: Dry-bulb temperature
W.B.: Wet-bulb temperature

COOLING operation at Rated frequency
SLZ-M35FA / SUZ-M35VA
CAPACITY :3.5(kW) INPUT :1090(W) SHF : 0.72

		OUTDOOR DB(℃)															
INDOOR	INDOOR	21				25				27				30			
DB(℃)	WB(℃)	Q	SHC	SHF	INPUT	Q	SHC	SHF	INPUT	Q	SHC	SHF	INPUT	Q	SHC	SHF	INPUT
21	18	4.11	2.22	0.54	872	3.94	2.13	0.54	916	3.78	2.04	0.54	959	3.64	1.97	0.54	1,003
21	20	4.29	1.80	0.42	916	4.11	1.73	0.42	970	3.99	1.68	0.42	992	3.85	1.62	0.42	1,036
22	18	4.11	2.39	0.58	872	3.94	2.28	0.58	916	3.78	2.19	0.58	959	3.64	2.11	0.58	1,003
22	20	4.29	1.97	0.46	916	4.11	1.89	0.46	970	3.99	1.84	0.46	992	3.85	1.77	0.46	1,036
22	22	4.46	1.52	0.34	948	4.31	1.46	0.34	1,008	4.20	1.43	0.34	1,036	4.03	1.37	0.34	1,079
23	18	4.11	2.55	0.62	872	3.94	2.44	0.62	916	3.78	2.34	0.62	959	3.64	2.26	0.62	1,003
23	20	4.29	2.14	0.50	916	4.11	2.06	0.50	970	3.99	2.00	0.50	992	3.85	1.93	0.50	1,036
23	22	4.46	1.70	0.38	948	4.31	1.64	0.38	1,008	4.20	1.60	0.38	1,036	4.03	1.53	0.38	1,079
24	18	4.11	2.71	0.66	872	3.94	2.60	0.66	916	3.78	2.49	0.66	959	3.64	2.40	0.66	1,003
24	20	4.29	2.32	0.54	916	4.11	2.22	0.54	970	3.99	2.15	0.54	992	3.85	2.08	0.54	1,036
24	22	4.46	1.87	0.42	948	4.31	1.81	0.42	1,008	4.20	1.76	0.42	1,036	4.03	1.69	0.42	1,079
24	24	4.69	1.41	0.30	992	4.52	1.35	0.30	1,046	4.41	1.32	0.30	1,079	4.27	1.28	0.30	1,134
25	20	4.29	2.49	0.58	916	4.11	2.39	0.58	970	3.99	2.31	0.58	992	3.85	2.23	0.58	1,036
25	22	4.46	2.05	0.46	948	4.31	1.98	0.46	1,008	4.20	1.93	0.46	1,036	4.03	1.85	0.46	1,079
25	24	4.69	1.59	0.34	992	4.52	1.54	0.34	1,046	4.41	1.50	0.34	1,079	4.27	1.45	0.34	1,134
26	18	4.11	3.04	0.74	872	3.94	2.91	0.74	916	3.78	2.80	0.74	959	3.64	2.69	0.74	1,003
26	20	4.29	2.66	0.62	916	4.11	2.55	0.62	970	3.99	2.47	0.62	992	3.85	2.39	0.62	1,036
26	22	4.46	2.23	0.50	948	4.31	2.15	0.50	1,008	4.20	2.10	0.50	1,036	4.03	2.01	0.50	1,079
26	24	4.69	1.78	0.38	992	4.52	1.72	0.38	1,046	4.41	1.68	0.38	1,079	4.27	1.62	0.38	1,134
26	26	4.83	1.26	0.26	1,046	4.69	1.22	0.26	1,101	4.62	1.20	0.26	1,134	4.48	1.16	0.26	1,166
27	18	4.11	3.21	0.78	872	3.94	3.07	0.78	916	3.78	2.95	0.78	959	3.64	2.84	0.78	1,003
27	20	4.29	2.83	0.66	916	4.11	2.71	0.66	970	3.99	2.63	0.66	992	3.85	2.54	0.66	1,036
27	22	4.46	2.41	0.54	948	4.31	2.32	0.54	1,008	4.20	2.27	0.54	1,036	4.03	2.17	0.54	1,079
27	24	4.69	1.97	0.42	992	4.52	1.90	0.42	1,046	4.41	1.85	0.42	1,079	4.27	1.79	0.42	1,134
27	26	4.83	1.45	0.30	1,046	4.69	1.41	0.30	1,101	4.62	1.39	0.30	1,134	4.48	1.34	0.30	1,166
28	18	4.11	3.37	0.82	872	3.94	3.23	0.82	916	3.78	3.10	0.82	959	3.64	2.98	0.82	1,003
28	20	4.29	3.00	0.70	916	4.11	2.88	0.70	970	3.99	2.79	0.70	992	3.85	2.70	0.70	1,036
28	22	4.46	2.59	0.58	948	4.31	2.50	0.58	1,008	4.20	2.44	0.58	1,036	4.03	2.33	0.58	1,079
28	24	4.69	2.16	0.46	992	4.52	2.08	0.46	1,046	4.41	2.03	0.46	1,079	4.27	1.96	0.46	1,134
28	26	4.83	1.64	0.34	1,046	4.69	1.59	0.34	1,101	4.62	1.57	0.34	1,134	4.48	1.52	0.34	1,166
29	18	4.11	3.54	0.86	872	3.94	3.39	0.86	916	3.78	3.25	0.86	959	3.64	3.13	0.86	1,003
29	20	4.29	3.17	0.74	916	4.11	3.04	0.74	970	3.99	2.95	0.74	992	3.85	2.85	0.74	1,036
29	22	4.46	2.77	0.62	948	4.31	2.67	0.62	1,008	4.20	2.60	0.62	1,036	4.03	2.50	0.62	1,079
29	24	4.69	2.35	0.50	992	4.52	2.26	0.50	1,046	4.41	2.21	0.50	1,079	4.27	2.14	0.50	1,134
29	26	4.83	1.84	0.38	1,046	4.69	1.78	0.38	1,101	4.62	1.76	0.38	1,134	4.48	1.70	0.38	1,166
30	18	4.11	3.70	0.90	872	3.94	3.54	0.90	916	3.78	3.40	0.90	959	3.64	3.28	0.90	1,003
30	20	4.29	3.34	0.78	916	4.11	3.21	0.78	970	3.99	3.11	0.78	992	3.85	3.00	0.78	1,036
30	22	4.46	2.95	0.66	948	4.31	2.84	0.66	1,008	4.20	2.77	0.66	1,036	4.03	2.66	0.66	1,079
30	24	4.69	2.53	0.54	992	4.52	2.44	0.54	1,046	4.41	2.38	0.54	1,079	4.27	2.31	0.54	1,134
30	26	4.83	2.03	0.42	1,046	4.69	1.97	0.42	1,101	4.62	1.94	0.42	1,134	4.48	1.88	0.42	1,166
31	18	4.11	3.87	0.94	872	3.94	3.70	0.94	916	3.78	3.55	0.94	959	3.64	3.42	0.94	1,003
31	20	4.29	3.52	0.82	916	4.11	3.37	0.82	970	3.99	3.27	0.82	992	3.85	3.16	0.82	1,036
31	22	4.46	3.12	0.70	948	4.31	3.01	0.70	1,008	4.20	2.94	0.70	1,036	4.03	2.82	0.70	1,079
31	24	4.69	2.72	0.58	992	4.52	2.62	0.58	1,046	4.41	2.56	0.58	1,079	4.27	2.48	0.58	1,134
31	26	4.83	2.22	0.46	1,046	4.69	2.16	0.46	1,101	4.62	2.13	0.46	1,134	4.48	2.06	0.46	1,166
32	18	4.11	4.03	0.98	872	3.94	3.86	0.98	916	3.78	3.70	0.98	959	3.64	3.57	0.98	1,003
32	20	4.29	3.69	0.86	916	4.11	3.54	0.86	970	3.99	3.43	0.86	992	3.85	3.31	0.86	1,036
32	22	4.46	3.30	0.74	948	4.31	3.19	0.74	1,008	4.20	3.11	0.74	1,036	4.03	2.98	0.74	1,079
32	24	4.69	2.91	0.62	992	4.52	2.80	0.62	1,046	4.41	2.73	0.62	1,079	4.27	2.65	0.62	1,134
32	26	4.83	2.42	0.50	1,046	4.69	2.35	0.50	1,101	4.62	2.31	0.50	1,134	4.48	2.24	0.50	1,166

Note: Q : Total capacity (kW)
SHC : Sensible heat capacity (kW)
SHF : Sensible heat factor
INPUT : Total power input (W)
D.B.: Dry-bulb temperature
W.B.: Wet-bulb temperature

COOLING operation at Rated frequency
SLZ-M35FA / SUZ-M35VA
CAPACITY :3.5(kW) INPUT :1090(W) SHF : 0.72

		OUTDOOR DB(℃)											
INDOOR	INDOOR	35				40				46			
DB(℃)	WB(℃)	Q	SHC	SHF	INPUT	Q	SHC	SHF	INPUT	Q	SHC	SHF	INPUT
21	18	3.43	1.85	0.54	1,068	3.15	1.70	0.54	1,134	2.91	1.57	0.54	1,177
21	20	3.61	1.51	0.42	1,112	3.36	1.41	0.42	1,166	3.12	1.31	0.42	1,232
22	18	3.43	1.99	0.58	1,068	3.15	1.83	0.58	1,134	2.91	1.68	0.58	1,177
22	20	3.61	1.66	0.46	1,112	3.36	1.55	0.46	1,166	3.12	1.43	0.46	1,232
22	22	3.82	1.30	0.34	1,155	3.57	1.21	0.34	1,221	3.33	1.13	0.34	1,264
23	18	3.43	2.13	0.62	1,068	3.15	1.95	0.62	1,134	2.91	1.80	0.62	1,177
23	20	3.61	1.80	0.50	1,112	3.36	1.68	0.50	1,166	3.12	1.56	0.50	1,232
23	22	3.82	1.45	0.38	1,155	3.57	1.36	0.38	1,221	3.33	1.26	0.38	1,264
24	18	3.43	2.26	0.66	1,068	3.15	2.08	0.66	1,134	2.91	1.92	0.66	1,177
24	20	3.61	1.95	0.54	1,112	3.36	1.81	0.54	1,166	3.12	1.68	0.54	1,232
24	22	3.82	1.60	0.42	1,155	3.57	1.50	0.42	1,221	3.33	1.40	0.42	1,264
24	24	4.03	1.21	0.30	1,199	3.78	1.13	0.30	1,254	3.57	1.07	0.30	1,308
25	20	3.61	2.09	0.58	1,112	3.36	1.95	0.58	1,166	3.12	1.81	0.58	1,232
25	22	3.82	1.75	0.46	1,155	3.57	1.64	0.46	1,221	3.33	1.53	0.46	1,264
25	24	4.03	1.37	0.34	1,199	3.78	1.29	0.34	1,254	3.57	1.21	0.34	1,308
26	18	3.43	2.54	0.74	1,068	3.15	2.33	0.74	1,134	2.91	2.15	0.74	1,177
26	20	3.61	2.24	0.62	1,112	3.36	2.08	0.62	1,166	3.12	1.93	0.62	1,232
26	22	3.82	1.91	0.50	1,155	3.57	1.79	0.50	1,221	3.33	1.66	0.50	1,264
26	24	4.03	1.53	0.38	1,199	3.78	1.44	0.38	1,254	3.57	1.36	0.38	1,308
26	26	4.24	1.10	0.26	1,243	3.99	1.04	0.26	1,297	3.75	0.97	0.26	1,352
27	18	3.43	2.68	0.78	1,068	3.15	2.46	0.78	1,134	2.91	2.27	0.78	1,177
27	20	3.61	2.38	0.66	1,112	3.36	2.22	0.66	1,166	3.12	2.06	0.66	1,232
27	22	3.82	2.06	0.54	1,155	3.57	1.93	0.54	1,221	3.33	1.80	0.54	1,264
27	24	4.03	1.69	0.42	1,199	3.78	1.59	0.42	1,254	3.57	1.50	0.42	1,308
27	26	4.24	1.27	0.30	1,243	3.99	1.20	0.30	1,297	3.75	1.12	0.30	1,352
28	18	3.43	2.81	0.82	1,068	3.15	2.58	0.82	1,134	2.91	2.38	0.82	1,177
28	20	3.61	2.52	0.70	1,112	3.36	2.35	0.70	1,166	3.12	2.18	0.70	1,232
28	22	3.82	2.21	0.58	1,155	3.57	2.07	0.58	1,221	3.33	1.93	0.58	1,264
28	24	4.03	1.85	0.46	1,199	3.78	1.74	0.46	1,254	3.57	1.64	0.46	1,308
28	26	4.24	1.44	0.34	1,243	3.99	1.36	0.34	1,297	3.75	1.27	0.34	1,352
29	18	3.43	2.95	0.86	1,068	3.15	2.71	0.86	1,134	2.91	2.50	0.86	1,177
29	20	3.61	2.67	0.74	1,112	3.36	2.49	0.74	1,166	3.12	2.31	0.74	1,232
29	22	3.82	2.37	0.62	1,155	3.57	2.21	0.62	1,221	3.33	2.06	0.62	1,264
29	24	4.03	2.01	0.50	1,199	3.78	1.89	0.50	1,254	3.57	1.79	0.50	1,308
29	26	4.24	1.61	0.38	1,243	3.99	1.52	0.38	1,297	3.75	1.42	0.38	1,352
30	18	3.43	3.09	0.90	1,068	3.15	2.84	0.90	1,134	2.91	2.61	0.90	1,177
30	20	3.61	2.81	0.78	1,112	3.36	2.62	0.78	1,166	3.12	2.43	0.78	1,232
30	22	3.82	2.52	0.66	1,155	3.57	2.36	0.66	1,221	3.33	2.19	0.66	1,264
30	24	4.03	2.17	0.54	1,199	3.78	2.04	0.54	1,254	3.57	1.93	0.54	1,308
30	26	4.24	1.78	0.42	1,243	3.99	1.68	0.42	1,297	3.75	1.57	0.42	1,352
31	18	3.43	3.22	0.94	1,068	3.15	2.96	0.94	1,134	2.91	2.73	0.94	1,177
31	20	3.61	2.96	0.82	1,112	3.36	2.76	0.82	1,166	3.12	2.55	0.82	1,232
31	22	3.82	2.67	0.70	1,155	3.57	2.50	0.70	1,221	3.33	2.33	0.70	1,264
31	24	4.03	2.33	0.58	1,199	3.78	2.19	0.58	1,254	3.57	2.07	0.58	1,308
31	26	4.24	1.95	0.46	1,243	3.99	1.84	0.46	1,297	3.75	1.72	0.46	1,352
32	18	3.43	3.36	0.98	1,068	3.15	3.09	0.98	1,134	2.91	2.85	0.98	1,177
32	20	3.61	3.10	0.86	1,112	3.36	2.89	0.86	1,166	3.12	2.68	0.86	1,232
32	22	3.82	2.82	0.74	1,155	3.57	2.64	0.74	1,221	3.33	2.46	0.74	1,264
32	24	4.03	2.50	0.62	1,199	3.78	2.34	0.62	1,254	3.57	2.21	0.62	1,308
32	26	4.24	2.12	0.50	1,243	3.99	2.00	0.50	1,297	3.75	1.87	0.50	1,352

Note: Q : Total capacity (kW) SHF : Sensible heat factor D.B.: Dry-bulb temperature
SHC : Sensible heat capacity (kW) INPUT : Total power input (W) W.B.: Wet-bulb temperature

COOLING operation at Rated frequency
SLZ-M50FA / SUZ-M50VA
CAPACITY :4.6(kW) INPUT :1350(W) SHF :0.68

		OUTDOOR DB(℃)															
INDOOR	INDOOR	21				25				27				30			
DB(℃)	WB(℃)	Q	SHC	SHF	INPUT	Q	SHC	SHF	INPUT	Q	SHC	SHF	INPUT	Q	SHC	SHF	INPUT
21	18	5.41	2.70	0.50	1,080	5.18	2.59	0.50	1,134	4.97	2.48	0.50	1,188	4.78	2.39	0.50	1,242
21	20	5.64	2.14	0.38	1,134	5.41	2.05	0.38	1,202	5.24	1.99	0.38	1,229	5.06	1.92	0.38	1,283
22	18	5.41	2.92	0.54	1,080	5.18	2.79	0.54	1,134	4.97	2.68	0.54	1,188	4.78	2.58	0.54	1,242
22	20	5.64	2.37	0.42	1,134	5.41	2.27	0.42	1,202	5.24	2.20	0.42	1,229	5.06	2.13	0.42	1,283
22	22	5.87	1.76	0.30	1,175	5.66	1.70	0.30	1,249	5.52	1.66	0.30	1,283	5.29	1.59	0.30	1,337
23	18	5.41	3.13	0.58	1,080	5.18	3.00	0.58	1,134	4.97	2.88	0.58	1,188	4.78	2.77	0.58	1,242
23	20	5.64	2.59	0.46	1,134	5.41	2.49	0.46	1,202	5.24	2.41	0.46	1,229	5.06	2.33	0.46	1,283
23	22	5.87	1.99	0.34	1,175	5.66	1.92	0.34	1,249	5.52	1.88	0.34	1,283	5.29	1.80	0.34	1,337
24	18	5.41	3.35	0.62	1,080	5.18	3.21	0.62	1,134	4.97	3.08	0.62	1,188	4.78	2.97	0.62	1,242
24	20	5.64	2.82	0.50	1,134	5.41	2.70	0.50	1,202	5.24	2.62	0.50	1,229	5.06	2.53	0.50	1,283
24	22	5.87	2.23	0.38	1,175	5.66	2.15	0.38	1,249	5.52	2.10	0.38	1,283	5.29	2.01	0.38	1,337
24	24	6.16	1.60	0.26	1,229	5.93	1.54	0.26	1,296	5.80	1.51	0.26	1,337	5.61	1.46	0.26	1,404
25	20	5.64	3.04	0.54	1,134	5.41	2.92	0.54	1,202	5.24	2.83	0.54	1,229	5.06	2.73	0.54	1,283
25	22	5.87	2.46	0.42	1,175	5.66	2.38	0.42	1,249	5.52	2.32	0.42	1,283	5.29	2.22	0.42	1,337
25	24	6.16	1.85	0.30	1,229	5.93	1.78	0.30	1,296	5.80	1.74	0.30	1,337	5.61	1.68	0.30	1,404
26	18	5.41	3.78	0.70	1,080	5.18	3.62	0.70	1,134	4.97	3.48	0.70	1,188	4.78	3.35	0.70	1,242
26	20	5.64	3.27	0.58	1,134	5.41	3.13	0.58	1,202	5.24	3.04	0.58	1,229	5.06	2.93	0.58	1,283
26	22	5.87	2.70	0.46	1,175	5.66	2.60	0.46	1,249	5.52	2.54	0.46	1,283	5.29	2.43	0.46	1,337
26	24	6.16	2.10	0.34	1,229	5.93	2.02	0.34	1,296	5.80	1.97	0.34	1,337	5.61	1.91	0.34	1,404
26	26	6.35	1.40	0.22	1,296	6.16	1.36	0.22	1,364	6.07	1.34	0.22	1,404	5.89	1.30	0.22	1,445
27	18	5.41	4.00	0.74	1,080	5.18	3.83	0.74	1,134	4.97	3.68	0.74	1,188	4.78	3.54	0.74	1,242
27	20	5.64	3.49	0.62	1,134	5.41	3.35	0.62	1,202	5.24	3.25	0.62	1,229	5.06	3.14	0.62	1,283
27	22	5.87	2.93	0.50	1,175	5.66	2.83	0.50	1,249	5.52	2.76	0.50	1,283	5.29	2.65	0.50	1,337
27	24	6.16	2.34	0.38	1,229	5.93	2.25	0.38	1,296	5.80	2.20	0.38	1,337	5.61	2.13	0.38	1,404
27	26	6.35	1.65	0.26	1,296	6.16	1.60	0.26	1,364	6.07	1.58	0.26	1,404	5.89	1.53	0.26	1,445
28	18	5.41	4.22	0.78	1,080	5.18	4.04	0.78	1,134	4.97	3.88	0.78	1,188	4.78	3.73	0.78	1,242
28	20	5.64	3.72	0.66	1,134	5.41	3.57	0.66	1,202	5.24	3.46	0.66	1,229	5.06	3.34	0.66	1,283
28	22	5.87	3.17	0.54	1,175	5.66	3.06	0.54	1,249	5.52	2.98	0.54	1,283	5.29	2.86	0.54	1,337
28	24	6.16	2.59	0.42	1,229	5.93	2.49	0.42	1,296	5.80	2.43	0.42	1,337	5.61	2.36	0.42	1,404
28	26	6.35	1.90	0.30	1,296	6.16	1.85	0.30	1,364	6.07	1.82	0.30	1,404	5.89	1.77	0.30	1,445
29	18	5.41	4.43	0.82	1,080	5.18	4.24	0.82	1,134	4.97	4.07	0.82	1,188	4.78	3.92	0.82	1,242
29	20	5.64	3.94	0.70	1,134	5.41	3.78	0.70	1,202	5.24	3.67	0.70	1,229	5.06	3.54	0.70	1,283
29	22	5.87	3.40	0.58	1,175	5.66	3.28	0.58	1,249	5.52	3.20	0.58	1,283	5.29	3.07	0.58	1,337
29	24	6.16	2.84	0.46	1,229	5.93	2.73	0.46	1,296	5.80	2.67	0.46	1,337	5.61	2.58	0.46	1,404
29	26	6.35	2.16	0.34	1,296	6.16	2.10	0.34	1,364	6.07	2.06	0.34	1,404	5.89	2.00	0.34	1,445
30	18	5.41	4.65	0.86	1,080	5.18	4.45	0.86	1,134	4.97	4.27	0.86	1,188	4.78	4.11	0.86	1,242
30	20	5.64	4.17	0.74	1,134	5.41	4.00	0.74	1,202	5.24	3.88	0.74	1,229	5.06	3.74	0.74	1,283
30	22	5.87	3.64	0.62	1,175	5.66	3.51	0.62	1,249	5.52	3.42	0.62	1,283	5.29	3.28	0.62	1,337
30	24	6.16	3.08	0.50	1,229	5.93	2.97	0.50	1,296	5.80	2.90	0.50	1,337	5.61	2.81	0.50	1,404
30	26	6.35	2.41	0.38	1,296	6.16	2.34	0.38	1,364	6.07	2.31	0.38	1,404	5.89	2.24	0.38	1,445
31	18	5.41	4.86	0.90	1,080	5.18	4.66	0.90	1,134	4.97	4.47	0.90	1,188	4.78	4.31	0.90	1,242
31	20	5.64	4.40	0.78	1,134	5.41	4.22	0.78	1,202	5.24	4.09	0.78	1,229	5.06	3.95	0.78	1,283
31	22	5.87	3.87	0.66	1,175	5.66	3.73	0.66	1,249	5.52	3.64	0.66	1,283	5.29	3.49	0.66	1,337
31	24	6.16	3.33	0.54	1,229	5.93	3.20	0.54	1,296	5.80	3.13	0.54	1,337	5.61	3.03	0.54	1,404
31	26	6.35	2.67	0.42	1,296	6.16	2.59	0.42	1,364	6.07	2.55	0.42	1,404	5.89	2.47	0.42	1,445
32	18	5.41	5.08	0.94	1,080	5.18	4.86	0.94	1,134	4.97	4.67	0.94	1,188	4.78	4.50	0.94	1,242
32	20	5.64	4.62	0.82	1,134	5.41	4.43	0.82	1,202	5.24	4.30	0.82	1,229	5.06	4.15	0.82	1,283
32	22	5.87	4.11	0.70	1,175	5.66	3.96	0.70	1,249	5.52	3.86	0.70	1,283	5.29	3.70	0.70	1,337
32	24	6.16	3.58	0.58	1,229	5.93	3.44	0.58	1,296	5.80	3.36	0.58	1,337	5.61	3.25	0.58	1,404
32	26	6.35	2.92	0.46	1,296	6.16	2.84	0.46	1,364	6.07	2.79	0.46	1,404	5.89	2.71	0.46	1,445

Note: Q : Total capacity (kW)
SHC : Sensible heat capacity (kW)
SHF : Sensible heat factor
INPUT : Total power input (W)
D.B.: Dry-bulb temperature
W.B.: Wet-bulb temperature

COOLING operation at Rated frequency
SLZ-M50FA / SUZ-M50VA
CAPACITY :4.6(kW) INPUT :1350(W) SHF :0.68

		OUTDOOR DB(℃)											
INDOOR	INDOOR	35				40				46			
DB(℃)	WB(℃)	Q	SHC	SHF	INPUT	Q	SHC	SHF	INPUT	Q	SHC	SHF	INPUT
21	18	4.51	2.25	0.50	1,323	4.14	2.07	0.50	1,404	3.82	1.91	0.50	1,458
21	20	4.74	1.80	0.38	1,377	4.42	1.68	0.38	1,445	4.09	1.56	0.38	1,526
22	18	4.51	2.43	0.54	1,323	4.14	2.24	0.54	1,404	3.82	2.06	0.54	1,458
22	20	4.74	1.99	0.42	1,377	4.42	1.85	0.42	1,445	4.09	1.72	0.42	1,526
22	22	5.01	1.50	0.30	1,431	4.69	1.41	0.30	1,512	4.37	1.31	0.30	1,566
23	18	4.51	2.61	0.58	1,323	4.14	2.40	0.58	1,404	3.82	2.21	0.58	1,458
23	20	4.74	2.18	0.46	1,377	4.42	2.03	0.46	1,445	4.09	1.88	0.46	1,526
23	22	5.01	1.70	0.34	1,431	4.69	1.60	0.34	1,512	4.37	1.49	0.34	1,566
24	18	4.51	2.79	0.62	1,323	4.14	2.57	0.62	1,404	3.82	2.37	0.62	1,458
24	20	4.74	2.37	0.50	1,377	4.42	2.21	0.50	1,445	4.09	2.05	0.50	1,526
24	22	5.01	1.91	0.38	1,431	4.69	1.78	0.38	1,512	4.37	1.66	0.38	1,566
24	24	5.29	1.38	0.26	1,485	4.97	1.29	0.26	1,553	4.69	1.22	0.26	1,620
25	20	4.74	2.56	0.54	1,377	4.42	2.38	0.54	1,445	4.09	2.21	0.54	1,526
25	22	5.01	2.11	0.42	1,431	4.69	1.97	0.42	1,512	4.37	1.84	0.42	1,566
25	24	5.29	1.59	0.30	1,485	4.97	1.49	0.30	1,553	4.69	1.41	0.30	1,620
26	18	4.51	3.16	0.70	1,323	4.14	2.90	0.70	1,404	3.82	2.67	0.70	1,458
26	20	4.74	2.75	0.58	1,377	4.42	2.56	0.58	1,445	4.09	2.37	0.58	1,526
26	22	5.01	2.31	0.46	1,431	4.69	2.16	0.46	1,512	4.37	2.01	0.46	1,566
26	24	5.29	1.80	0.34	1,485	4.97	1.69	0.34	1,553	4.69	1.60	0.34	1,620
26	26	5.57	1.22	0.22	1,539	5.24	1.15	0.22	1,607	4.92	1.08	0.22	1,674
27	18	4.51	3.34	0.74	1,323	4.14	3.06	0.74	1,404	3.82	2.83	0.74	1,458
27	20	4.74	2.94	0.62	1,377	4.42	2.74	0.62	1,445	4.09	2.54	0.62	1,526
27	22	5.01	2.51	0.50	1,431	4.69	2.35	0.50	1,512	4.37	2.19	0.50	1,566
27	24	5.29	2.01	0.38	1,485	4.97	1.89	0.38	1,553	4.69	1.78	0.38	1,620
27	26	5.57	1.45	0.26	1,539	5.24	1.36	0.26	1,607	4.92	1.28	0.26	1,674
28	18	4.51	3.52	0.78	1,323	4.14	3.23	0.78	1,404	3.82	2.98	0.78	1,458
28	20	4.74	3.13	0.66	1,377	4.42	2.91	0.66	1,445	4.09	2.70	0.66	1,526
28	22	5.01	2.71	0.54	1,431	4.69	2.53	0.54	1,512	4.37	2.36	0.54	1,566
28	24	5.29	2.22	0.42	1,485	4.97	2.09	0.42	1,553	4.69	1.97	0.42	1,620
28	26	5.57	1.67	0.30	1,539	5.24	1.57	0.30	1,607	4.92	1.48	0.30	1,674
29	18	4.51	3.70	0.82	1,323	4.14	3.39	0.82	1,404	3.82	3.13	0.82	1,458
29	20	4.74	3.32	0.70	1,377	4.42	3.09	0.70	1,445	4.09	2.87	0.70	1,526
29	22	5.01	2.91	0.58	1,431	4.69	2.72	0.58	1,512	4.37	2.53	0.58	1,566
29	24	5.29	2.43	0.46	1,485	4.97	2.29	0.46	1,553	4.69	2.16	0.46	1,620
29	26	5.57	1.89	0.34	1,539	5.24	1.78	0.34	1,607	4.92	1.67	0.34	1,674
30	18	4.51	3.88	0.86	1,323	4.14	3.56	0.86	1,404	3.82	3.28	0.86	1,458
30	20	4.74	3.51	0.74	1,377	4.42	3.27	0.74	1,445	4.09	3.03	0.74	1,526
30	22	5.01	3.11	0.62	1,431	4.69	2.91	0.62	1,512	4.37	2.71	0.62	1,566
30	24	5.29	2.65	0.50	1,485	4.97	2.48	0.50	1,553	4.69	2.35	0.50	1,620
30	26	5.57	2.12	0.38	1,539	5.24	1.99	0.38	1,607	4.92	1.87	0.38	1,674
31	18	4.51	4.06	0.90	1,323	4.14	3.73	0.90	1,404	3.82	3.44	0.90	1,458
31	20	4.74	3.70	0.78	1,377	4.42	3.44	0.78	1,445	4.09	3.19	0.78	1,526
31	22	5.01	3.31	0.66	1,431	4.69	3.10	0.66	1,512	4.37	2.88	0.66	1,566
31	24	5.29	2.86	0.54	1,485	4.97	2.68	0.54	1,553	4.69	2.53	0.54	1,620
31	26	5.57	2.34	0.42	1,539	5.24	2.20	0.42	1,607	4.92	2.07	0.42	1,674
32	18	4.51	4.24	0.94	1,323	4.14	3.89	0.94	1,404	3.82	3.59	0.94	1,458
32	20	4.74	3.89	0.82	1,377	4.42	3.62	0.82	1,445	4.09	3.36	0.82	1,526
32	22	5.01	3.51	0.70	1,431	4.69	3.28	0.70	1,512	4.37	3.06	0.70	1,566
32	24	5.29	3.07	0.58	1,485	4.97	2.88	0.58	1,553	4.69	2.72	0.58	1,620
32	26	5.57	2.56	0.46	1,539	5.24	2.41	0.46	1,607	4.92	2.26	0.46	1,674

Note: Q : Total capacity (kW) SHF : Sensible heat factor D.B.: Dry-bulb temperature
SHC : Sensible heat capacity (kW) INPUT : Total power input (W) W.B.: Wet-bulb temperature

COOLING operation at Rated frequency
SLZ-M60FA / SUZ-M60VA
CAPACITY :5.7(kW) INPUT :1670(W) SHF : 0.68

		OUTDOOR DB(℃)															
INDOOR	INDOOR	21				25				27				30			
DB(℃)	WB(℃)	Q	SHC	SHF	INPUT	Q	SHC	SHF	INPUT	Q	SHC	SHF	INPUT	Q	SHC	SHF	INPUT
21	18	6.70	3.35	0.50	1,336	6.41	3.21	0.50	1,403	6.16	3.08	0.50	1,470	5.93	2.96	0.50	1,536
21	20	6.98	2.65	0.38	1,403	6.70	2.55	0.38	1,486	6.50	2.47	0.38	1,520	6.27	2.38	0.38	1,587
22	18	6.70	3.62	0.54	1,336	6.41	3.46	0.54	1,403	6.16	3.32	0.54	1,470	5.93	3.20	0.54	1,536
22	20	6.98	2.93	0.42	1,403	6.70	2.81	0.42	1,486	6.50	2.73	0.42	1,520	6.27	2.63	0.42	1,587
22	22	7.27	2.18	0.30	1,453	7.01	2.10	0.30	1,545	6.84	2.05	0.30	1,587	6.56	1.97	0.30	1,653
23	18	6.70	3.88	0.58	1,336	6.41	3.72	0.58	1,403	6.16	3.57	0.58	1,470	5.93	3.44	0.58	1,536
23	20	6.98	3.21	0.46	1,403	6.70	3.08	0.46	1,486	6.50	2.99	0.46	1,520	6.27	2.88	0.46	1,587
23	22	7.27	2.47	0.34	1,453	7.01	2.38	0.34	1,545	6.84	2.33	0.34	1,587	6.56	2.23	0.34	1,653
24	18	6.70	4.15	0.62	1,336	6.41	3.98	0.62	1,403	6.16	3.82	0.62	1,470	5.93	3.68	0.62	1,536
24	20	6.98	3.49	0.50	1,403	6.70	3.35	0.50	1,486	6.50	3.25	0.50	1,520	6.27	3.14	0.50	1,587
24	22	7.27	2.76	0.38	1,453	7.01	2.66	0.38	1,545	6.84	2.60	0.38	1,587	6.56	2.49	0.38	1,653
24	24	7.64	1.99	0.26	1,520	7.35	1.91	0.26	1,603	7.18	1.87	0.26	1,653	6.95	1.81	0.26	1,737
25	20	6.98	3.77	0.54	1,403	6.70	3.62	0.54	1,486	6.50	3.51	0.54	1,520	6.27	3.39	0.54	1,587
25	22	7.27	3.05	0.42	1,453	7.01	2.94	0.42	1,545	6.84	2.87	0.42	1,587	6.56	2.75	0.42	1,653
25	24	7.64	2.29	0.30	1,520	7.35	2.21	0.30	1,603	7.18	2.15	0.30	1,653	6.95	2.09	0.30	1,737
26	18	6.70	4.69	0.70	1,336	6.41	4.49	0.70	1,403	6.16	4.31	0.70	1,470	5.93	4.15	0.70	1,536
26	20	6.98	4.05	0.58	1,403	6.70	3.88	0.58	1,486	6.50	3.77	0.58	1,520	6.27	3.64	0.58	1,587
26	22	7.27	3.34	0.46	1,453	7.01	3.23	0.46	1,545	6.84	3.15	0.46	1,587	6.56	3.02	0.46	1,653
26	24	7.64	2.60	0.34	1,520	7.35	2.50	0.34	1,603	7.18	2.44	0.34	1,653	6.95	2.36	0.34	1,737
26	26	7.87	1.73	0.22	1,603	7.64	1.68	0.22	1,687	7.52	1.66	0.22	1,737	7.30	1.61	0.22	1,787
27	18	6.70	4.96	0.74	1,336	6.41	4.75	0.74	1,403	6.16	4.56	0.74	1,470	5.93	4.39	0.74	1,536
27	20	6.98	4.33	0.62	1,403	6.70	4.15	0.62	1,486	6.50	4.03	0.62	1,520	6.27	3.89	0.62	1,587
27	22	7.27	3.63	0.50	1,453	7.01	3.51	0.50	1,545	6.84	3.42	0.50	1,587	6.56	3.28	0.50	1,653
27	24	7.64	2.90	0.38	1,520	7.35	2.79	0.38	1,603	7.18	2.73	0.38	1,653	6.95	2.64	0.38	1,737
27	26	7.87	2.05	0.26	1,603	7.64	1.99	0.26	1,687	7.52	1.96	0.26	1,737	7.30	1.90	0.26	1,787
28	18	6.70	5.22	0.78	1,336	6.41	5.00	0.78	1,403	6.16	4.80	0.78	1,470	5.93	4.62	0.78	1,536
28	20	6.98	4.61	0.66	1,403	6.70	4.42	0.66	1,486	6.50	4.29	0.66	1,520	6.27	4.14	0.66	1,587
28	22	7.27	3.92	0.54	1,453	7.01	3.79	0.54	1,545	6.84	3.69	0.54	1,587	6.56	3.54	0.54	1,653
28	24	7.64	3.21	0.42	1,520	7.35	3.09	0.42	1,603	7.18	3.02	0.42	1,653	6.95	2.92	0.42	1,737
28	26	7.87	2.36	0.30	1,603	7.64	2.29	0.30	1,687	7.52	2.26	0.30	1,737	7.30	2.19	0.30	1,787
29	18	6.70	5.49	0.82	1,336	6.41	5.26	0.82	1,403	6.16	5.05	0.82	1,470	5.93	4.86	0.82	1,536
29	20	6.98	4.89	0.70	1,403	6.70	4.69	0.70	1,486	6.50	4.55	0.70	1,520	6.27	4.39	0.70	1,587
29	22	7.27	4.22	0.58	1,453	7.01	4.07	0.58	1,545	6.84	3.97	0.58	1,587	6.56	3.80	0.58	1,653
29	24	7.64	3.51	0.46	1,520	7.35	3.38	0.46	1,603	7.18	3.30	0.46	1,653	6.95	3.20	0.46	1,737
29	26	7.87	2.67	0.34	1,603	7.64	2.60	0.34	1,687	7.52	2.56	0.34	1,737	7.30	2.48	0.34	1,787
30	18	6.70	5.76	0.86	1,336	6.41	5.51	0.86	1,403	6.16	5.29	0.86	1,470	5.93	5.10	0.86	1,536
30	20	6.98	5.17	0.74	1,403	6.70	4.96	0.74	1,486	6.50	4.81	0.74	1,520	6.27	4.64	0.74	1,587
30	22	7.27	4.51	0.62	1,453	7.01	4.35	0.62	1,545	6.84	4.24	0.62	1,587	6.56	4.06	0.62	1,653
30	24	7.64	3.82	0.50	1,520	7.35	3.68	0.50	1,603	7.18	3.59	0.50	1,653	6.95	3.48	0.50	1,737
30	26	7.87	2.99	0.38	1,603	7.64	2.90	0.38	1,687	7.52	2.86	0.38	1,737	7.30	2.77	0.38	1,787
31	18	6.70	6.03	0.90	1,336	6.41	5.77	0.90	1,403	6.16	5.54	0.90	1,470	5.93	5.34	0.90	1,536
31	20	6.98	5.45	0.78	1,403	6.70	5.22	0.78	1,486	6.50	5.07	0.78	1,520	6.27	4.89	0.78	1,587
31	22	7.27	4.80	0.66	1,453	7.01	4.63	0.66	1,545	6.84	4.51	0.66	1,587	6.56	4.33	0.66	1,653
31	24	7.64	4.12	0.54	1,520	7.35	3.97	0.54	1,603	7.18	3.88	0.54	1,653	6.95	3.76	0.54	1,737
31	26	7.87	3.30	0.42	1,603	7.64	3.21	0.42	1,687	7.52	3.16	0.42	1,737	7.30	3.06	0.42	1,787
32	18	6.70	6.30	0.94	1,336	6.41	6.03	0.94	1,403	6.16	5.79	0.94	1,470	5.93	5.57	0.94	1,536
32	20	6.98	5.73	0.82	1,403	6.70	5.49	0.82	1,486	6.50	5.33	0.82	1,520	6.27	5.14	0.82	1,587
32	22	7.27	5.09	0.70	1,453	7.01	4.91	0.70	1,545	6.84	4.79	0.70	1,587	6.56	4.59	0.70	1,653
32	24	7.64	4.43	0.58	1,520	7.35	4.26	0.58	1,603	7.18	4.17	0.58	1,653	6.95	4.03	0.58	1,737
32	26	7.87	3.62	0.46	1,603	7.64	3.51	0.46	1,687	7.52	3.46	0.46	1,737	7.30	3.36	0.46	1,787

Note: Q : Total capacity (kW) SHF : Sensible heat factor D.B.: Dry-bulb temperature
SHC : Sensible heat capacity (kW) INPUT : Total power input (W) W.B.: Wet-bulb temperature

COOLING operation at Rated frequency
SLZ-M60FA / SUZ-M60VA
CAPACITY :5.7(kW) INPUT :1670(W) SHF : 0.68

		OUTDOOR DB(℃)											
INDOOR	INDOOR	35				40				46			
DB(℃)	WB(℃)	Q	SHC	SHF	INPUT	Q	SHC	SHF	INPUT	Q	SHC	SHF	INPUT
21	18	5.59	2.79	0.50	1,637	5.13	2.57	0.50	1,737	4.73	2.37	0.50	1,804
21	20	5.87	2.23	0.38	1,703	5.47	2.08	0.38	1,787	5.07	1.93	0.38	1,887
22	18	5.59	3.02	0.54	1,637	5.13	2.77	0.54	1,737	4.73	2.55	0.54	1,804
22	20	5.87	2.47	0.42	1,703	5.47	2.30	0.42	1,787	5.07	2.13	0.42	1,887
22	22	6.21	1.86	0.30	1,770	5.81	1.74	0.30	1,870	5.42	1.62	0.30	1,937
23	18	5.59	3.24	0.58	1,637	5.13	2.98	0.58	1,737	4.73	2.74	0.58	1,804
23	20	5.87	2.70	0.46	1,703	5.47	2.52	0.46	1,787	5.07	2.33	0.46	1,887
23	22	6.21	2.11	0.34	1,770	5.81	1.98	0.34	1,870	5.42	1.84	0.34	1,937
24	18	5.59	3.46	0.62	1,637	5.13	3.18	0.62	1,737	4.73	2.93	0.62	1,804
24	20	5.87	2.94	0.50	1,703	5.47	2.74	0.50	1,787	5.07	2.54	0.50	1,887
24	22	6.21	2.36	0.38	1,770	5.81	2.21	0.38	1,870	5.42	2.06	0.38	1,937
24	24	6.56	1.70	0.26	1,837	6.16	1.60	0.26	1,921	5.81	1.51	0.26	2,004
25	20	5.87	3.17	0.54	1,703	5.47	2.95	0.54	1,787	5.07	2.74	0.54	1,887
25	22	6.21	2.61	0.42	1,770	5.81	2.44	0.42	1,870	5.42	2.27	0.42	1,937
25	24	6.56	1.97	0.30	1,837	6.16	1.85	0.30	1,921	5.81	1.74	0.30	2,004
26	18	5.59	3.91	0.70	1,637	5.13	3.59	0.70	1,737	4.73	3.31	0.70	1,804
26	20	5.87	3.41	0.58	1,703	5.47	3.17	0.58	1,787	5.07	2.94	0.58	1,887
26	22	6.21	2.86	0.46	1,770	5.81	2.67	0.46	1,870	5.42	2.49	0.46	1,937
26	24	6.56	2.23	0.34	1,837	6.16	2.09	0.34	1,921	5.81	1.98	0.34	2,004
26	26	6.90	1.52	0.22	1,904	6.50	1.43	0.22	1,987	6.10	1.34	0.22	2,071
27	18	5.59	4.13	0.74	1,637	5.13	3.80	0.74	1,737	4.73	3.50	0.74	1,804
27	20	5.87	3.64	0.62	1,703	5.47	3.39	0.62	1,787	5.07	3.15	0.62	1,887
27	22	6.21	3.11	0.50	1,770	5.81	2.91	0.50	1,870	5.42	2.71	0.50	1,937
27	24	6.56	2.49	0.38	1,837	6.16	2.34	0.38	1,921	5.81	2.21	0.38	2,004
27	26	6.90	1.79	0.26	1,904	6.50	1.69	0.26	1,987	6.10	1.59	0.26	2,071
28	18	5.59	4.36	0.78	1,637	5.13	4.00	0.78	1,737	4.73	3.69	0.78	1,804
28	20	5.87	3.87	0.66	1,703	5.47	3.61	0.66	1,787	5.07	3.35	0.66	1,887
28	22	6.21	3.36	0.54	1,770	5.81	3.14	0.54	1,870	5.42	2.92	0.54	1,937
28	24	6.56	2.75	0.42	1,837	6.16	2.59	0.42	1,921	5.81	2.44	0.42	2,004
28	26	6.90	2.07	0.30	1,904	6.50	1.95	0.30	1,987	6.10	1.83	0.30	2,071
29	18	5.59	4.58	0.82	1,637	5.13	4.21	0.82	1,737	4.73	3.88	0.82	1,804
29	20	5.87	4.11	0.70	1,703	5.47	3.83	0.70	1,787	5.07	3.55	0.70	1,887
29	22	6.21	3.60	0.58	1,770	5.81	3.37	0.58	1,870	5.42	3.14	0.58	1,937
29	24	6.56	3.02	0.46	1,837	6.16	2.83	0.46	1,921	5.81	2.67	0.46	2,004
29	26	6.90	2.34	0.34	1,904	6.50	2.21	0.34	1,987	6.10	2.07	0.34	2,071
30	18	5.59	4.80	0.86	1,637	5.13	4.41	0.86	1,737	4.73	4.07	0.86	1,804
30	20	5.87	4.34	0.74	1,703	5.47	4.05	0.74	1,787	5.07	3.75	0.74	1,887
30	22	6.21	3.85	0.62	1,770	5.81	3.60	0.62	1,870	5.42	3.36	0.62	1,937
30	24	6.56	3.28	0.50	1,837	6.16	3.08	0.50	1,921	5.81	2.91	0.50	2,004
30	26	6.90	2.62	0.38	1,904	6.50	2.47	0.38	1,987	6.10	2.32	0.38	2,071
31	18	5.59	5.03	0.90	1,637	5.13	4.62	0.90	1,737	4.73	4.26	0.90	1,804
31	20	5.87	4.58	0.78	1,703	5.47	4.27	0.78	1,787	5.07	3.96	0.78	1,887
31	22	6.21	4.10	0.66	1,770	5.81	3.84	0.66	1,870	5.42	3.57	0.66	1,937
31	24	6.56	3.54	0.54	1,837	6.16	3.32	0.54	1,921	5.81	3.14	0.54	2,004
31	26	6.90	2.90	0.42	1,904	6.50	2.73	0.42	1,987	6.10	2.56	0.42	2,071
32	18	5.59	5.25	0.94	1,637	5.13	4.82	0.94	1,737	4.73	4.45	0.94	1,804
32	20	5.87	4.81	0.82	1,703	5.47	4.49	0.82	1,787	5.07	4.16	0.82	1,887
32	22	6.21	4.35	0.70	1,770	5.81	4.07	0.70	1,870	5.42	3.79	0.70	1,937
32	24	6.56	3.80	0.58	1,837	6.16	3.57	0.58	1,921	5.81	3.37	0.58	2,004
32	26	6.90	3.17	0.46	1,904	6.50	2.99	0.46	1,987	6.10	2.81	0.46	2,071

Note: Q : Total capacity (kW) SHF : Sensible heat factor D.B.: Dry-bulb temperature
SHC : Sensible heat capacity (kW) INPUT : Total power input (W) W.B.: Wet-bulb temperature

HEATING operation

SLZ-M25FA / SUZ-M25VA at Rated frequency

CAPACITY :3.2(kW) INPUT :880(W)

	OUTDOOR WB(℃)															
INDOOR	-15		-10		-5		0		5		10		15		20	
DB(℃)	Q	INPUT	Q	INPUT	Q	INPUT	Q	INPUT	Q	INPUT	Q	INPUT	Q	INPUT	Q	INPUT
15	1.60	458	2.02	572	2.43	686	2.85	774	3.26	836	3.68	889	4.06	915	4.48	933
21	1.50	488	1.92	616	2.30	730	2.72	810	3.10	871	3.52	915	3.90	942	4.30	977
26	1.31	528	1.73	660	2.14	774	2.53	854	2.94	915	3.36	959	3.74	986	4.16	1012

SLZ-M35FA / SUZ-M35VA at Rated frequency

CAPACITY :4.0(kW) INPUT :1070(W)

	OUTDOOR WB(℃)															
INDOOR	-15		-10		-5		0		5		10		15		20	
DB(℃)	Q	INPUT	Q	INPUT	Q	INPUT	Q	INPUT	Q	INPUT	Q	INPUT	Q	INPUT	Q	INPUT
15	2.00	556	2.52	696	3.04	835	3.56	942	4.08	1017	4.60	1081	5.08	1113	5.60	1134
21	1.88	593	2.40	749	2.88	888	3.40	984	3.88	1059	4.40	1113	4.88	1145	5.38	1188
26	1.64	642	2.16	803	2.68	942	3.16	1038	3.68	1113	4.20	1166	4.68	1198	5.20	1231

SLZ-M50FA / SUZ-M50VA at Rated frequency

CAPACITY :5.0(kW) INPUT :1560(W)

	OUTDOOR WB(℃)															
INDOOR	-15		-10		-5		0		5		10		15		20	
DB(℃)	Q	INPUT	Q	INPUT	Q	INPUT	Q	INPUT	Q	INPUT	Q	INPUT	Q	INPUT	Q	INPUT
15	2.50	811	3.15	1014	3.80	1217	4.45	1373	5.10	1482	5.75	1576	6.35	1622	7.00	1654
21	2.35	864	3.00	1092	3.60	1295	4.25	1435	4.85	1544	5.50	1622	6.10	1669	6.73	1732
26	2.05	936	2.70	1170	3.35	1373	3.95	1513	4.60	1622	5.25	1700	5.85	1747	6.50	1794

SLZ-M60FA / SUZ-M60VA at Rated frequency

CAPACITY :6.4(kW) INPUT :2130(W)

	OUTDOOR WB(℃)															
INDOOR	-15		-10		-5		0		5		10		15		20	
DB(℃)	Q	INPUT	Q	INPUT	Q	INPUT	Q	INPUT	Q	INPUT	Q	INPUT	Q	INPUT	Q	INPUT
15	3.20	1108	4.03	1385	4.86	1661	5.70	1874	6.53	2024	7.36	2151	8.13	2215	8.96	2258
21	3.01	1180	3.84	1491	4.61	1768	5.44	1960	6.21	2109	7.04	2215	7.81	2279	8.61	2364
26	2.62	1278	3.46	1598	4.29	1874	5.06	2066	5.89	2215	6.72	2322	7.49	2386	8.32	2450

Note: Q : Total capacity (kW) SHF : Sensible heat factor D.B.: Dry-bulb temperature
SHC : Sensible heat capacity (kW) INPUT : Total power input (W) W.B.: Wet-bulb temperature

B.1.5.2 R410A type

COOLING operation at Rated frequency
SLZ-M25FA / SUZ-KA25VA6
CAPACITY : 2.6(kW) INPUT : 684(W) SHF : 0.78

		OUTDOOR DB(℃)															
INDOOR	INDOOR	21				25				27				30			
DB(℃)	WB(℃)	Q	SHC	SHF	INPUT	Q	SHC	SHF	INPUT	Q	SHC	SHF	INPUT	Q	SHC	SHF	INPUT
21	18	3.06	1.83	0.60	547	2.93	1.76	0.60	575	2.81	1.68	0.60	602	2.70	1.62	0.60	629
21	20	3.19	1.53	0.48	575	3.06	1.47	0.48	609	2.96	1.42	0.48	622	2.86	1.37	0.48	650
22	18	3.06	1.96	0.64	547	2.93	1.87	0.64	575	2.81	1.80	0.64	602	2.70	1.73	0.64	629
22	20	3.19	1.66	0.52	575	3.06	1.59	0.52	609	2.96	1.54	0.52	622	2.86	1.49	0.52	650
22	22	3.32	1.33	0.40	595	3.20	1.28	0.40	633	3.12	1.25	0.40	650	2.99	1.20	0.40	677
23	18	3.06	2.08	0.68	547	2.93	1.99	0.68	575	2.81	1.91	0.68	602	2.70	1.84	0.68	629
23	20	3.19	1.78	0.56	575	3.06	1.71	0.56	609	2.96	1.66	0.56	622	2.86	1.60	0.56	650
23	22	3.32	1.46	0.44	595	3.20	1.41	0.44	633	3.12	1.37	0.44	650	2.99	1.32	0.44	677
24	18	3.06	2.20	0.72	547	2.93	2.11	0.72	575	2.81	2.02	0.72	602	2.70	1.95	0.72	629
24	20	3.19	1.91	0.60	575	3.06	1.83	0.60	609	2.96	1.78	0.60	622	2.86	1.72	0.60	650
24	22	3.32	1.59	0.48	595	3.20	1.54	0.48	633	3.12	1.50	0.48	650	2.99	1.44	0.48	677
24	24	3.48	1.25	0.36	622	3.35	1.21	0.36	657	3.28	1.18	0.36	677	3.17	1.14	0.36	711
25	20	3.19	2.04	0.64	575	3.06	1.96	0.64	609	2.96	1.90	0.64	622	2.86	1.83	0.64	650
25	22	3.32	1.72	0.52	595	3.20	1.66	0.52	633	3.12	1.62	0.52	650	2.99	1.55	0.52	677
25	24	3.48	1.39	0.40	622	3.35	1.34	0.40	657	3.28	1.31	0.40	677	3.17	1.27	0.40	711
26	18	3.06	2.44	0.80	547	2.93	2.34	0.80	575	2.81	2.25	0.80	602	2.70	2.16	0.80	629
26	20	3.19	2.17	0.68	575	3.06	2.08	0.68	609	2.96	2.02	0.68	622	2.86	1.94	0.68	650
26	22	3.32	1.86	0.56	595	3.20	1.79	0.56	633	3.12	1.75	0.56	650	2.99	1.67	0.56	677
26	24	3.48	1.53	0.44	622	3.35	1.48	0.44	657	3.28	1.44	0.44	677	3.17	1.40	0.44	711
26	26	3.59	1.15	0.32	657	3.48	1.11	0.32	691	3.43	1.10	0.32	711	3.33	1.06	0.32	732
27	18	3.06	2.57	0.84	547	2.93	2.46	0.84	575	2.81	2.36	0.84	602	2.70	2.27	0.84	629
27	20	3.19	2.29	0.72	575	3.06	2.20	0.72	609	2.96	2.13	0.72	622	2.86	2.06	0.72	650
27	22	3.32	1.99	0.60	595	3.20	1.92	0.60	633	3.12	1.87	0.60	650	2.99	1.79	0.60	677
27	24	3.48	1.67	0.48	622	3.35	1.61	0.48	657	3.28	1.57	0.48	677	3.17	1.52	0.48	711
27	26	3.59	1.29	0.36	657	3.48	1.25	0.36	691	3.43	1.24	0.36	711	3.33	1.20	0.36	732
28	18	3.06	2.69	0.88	547	2.93	2.57	0.88	575	2.81	2.47	0.88	602	2.70	2.38	0.88	629
28	20	3.19	2.42	0.76	575	3.06	2.32	0.76	609	2.96	2.25	0.76	622	2.86	2.17	0.76	650
28	22	3.32	2.12	0.64	595	3.20	2.05	0.64	633	3.12	2.00	0.64	650	2.99	1.91	0.64	677
28	24	3.48	1.81	0.52	622	3.35	1.74	0.52	657	3.28	1.70	0.52	677	3.17	1.65	0.52	711
28	26	3.59	1.44	0.40	657	3.48	1.39	0.40	691	3.43	1.37	0.40	711	3.33	1.33	0.40	732
29	18	3.06	2.81	0.92	547	2.93	2.69	0.92	575	2.81	2.58	0.92	602	2.70	2.49	0.92	629
29	20	3.19	2.55	0.80	575	3.06	2.44	0.80	609	2.96	2.37	0.80	622	2.86	2.29	0.80	650
29	22	3.32	2.25	0.68	595	3.20	2.17	0.68	633	3.12	2.12	0.68	650	2.99	2.03	0.68	677
29	24	3.48	1.95	0.56	622	3.35	1.88	0.56	657	3.28	1.83	0.56	677	3.17	1.78	0.56	711
29	26	3.59	1.58	0.44	657	3.48	1.53	0.44	691	3.43	1.51	0.44	711	3.33	1.46	0.44	732
30	18	3.06	2.93	0.96	547	2.93	2.81	0.96	575	2.81	2.70	0.96	602	2.70	2.60	0.96	629
30	20	3.19	2.68	0.84	575	3.06	2.57	0.84	609	2.96	2.49	0.84	622	2.86	2.40	0.84	650
30	22	3.32	2.39	0.72	595	3.20	2.30	0.72	633	3.12	2.25	0.72	650	2.99	2.15	0.72	677
30	24	3.48	2.09	0.60	622	3.35	2.01	0.60	657	3.28	1.97	0.60	677	3.17	1.90	0.60	711
30	26	3.59	1.72	0.48	657	3.48	1.67	0.48	691	3.43	1.65	0.48	711	3.33	1.60	0.48	732
31	18	3.06	3.06	1.00	547	2.93	2.93	1.00	575	2.81	2.81	1.00	602	2.70	2.70	1.00	629
31	20	3.19	2.80	0.88	575	3.06	2.69	0.88	609	2.96	2.61	0.88	622	2.86	2.52	0.88	650
31	22	3.32	2.52	0.76	595	3.20	2.43	0.76	633	3.12	2.37	0.76	650	2.99	2.27	0.76	677
31	24	3.48	2.23	0.64	622	3.35	2.15	0.64	657	3.28	2.10	0.64	677	3.17	2.03	0.64	711
31	26	3.59	1.87	0.52	657	3.48	1.81	0.52	691	3.43	1.78	0.52	711	3.33	1.73	0.52	732
32	18	3.06	3.06	1.00	547	2.93	2.93	1.00	575	2.81	2.81	1.00	602	2.70	2.70	1.00	629
32	20	3.19	2.93	0.92	575	3.06	2.81	0.92	609	2.96	2.73	0.92	622	2.86	2.63	0.92	650
32	22	3.32	2.65	0.80	595	3.20	2.56	0.80	633	3.12	2.50	0.80	650	2.99	2.39	0.80	677
32	24	3.48	2.37	0.68	622	3.35	2.28	0.68	657	3.28	2.23	0.68	677	3.17	2.16	0.68	711
32	26	3.59	2.01	0.56	657	3.48	1.95	0.56	691	3.43	1.92	0.56	711	3.33	1.86	0.56	732

Note: Q : Total capacity (kW) SHF : Sensible heat factor D.B.: Dry-bulb temperature
SHC : Sensible heat capacity (kW) INPUT : Total power input (W) W.B.: Wet-bulb temperature

COOLING operation at Rated frequency
SLZ-M25FA / SUZ-KA25VA6
CAPACITY : 2.6(kW) INPUT : 684(W) SHF : 0.78

		OUTDOOR DB(℃)											
INDOOR	INDOOR	35				40				46			
DB(℃)	WB(℃)	Q	SHC	SHF	INPUT	Q	SHC	SHF	INPUT	Q	SHC	SHF	INPUT
21	18	2.55	1.53	0.60	670	2.34	1.40	0.60	711	2.16	1.29	0.60	739
21	20	2.68	1.29	0.48	698	2.50	1.20	0.48	732	2.31	1.11	0.48	773
22	18	2.55	1.63	0.64	670	2.34	1.50	0.64	711	2.16	1.38	0.64	739
22	20	2.68	1.39	0.52	698	2.50	1.30	0.52	732	2.31	1.20	0.52	773
22	22	2.83	1.13	0.40	725	2.65	1.06	0.40	766	2.47	0.99	0.40	793
23	18	2.55	1.73	0.68	670	2.34	1.59	0.68	711	2.16	1.47	0.68	739
23	20	2.68	1.50	0.56	698	2.50	1.40	0.56	732	2.31	1.30	0.56	773
23	22	2.83	1.25	0.44	725	2.65	1.17	0.44	766	2.47	1.09	0.44	793
24	18	2.55	1.83	0.72	670	2.34	1.68	0.72	711	2.16	1.55	0.72	739
24	20	2.68	1.61	0.60	698	2.50	1.50	0.60	732	2.31	1.39	0.60	773
24	22	2.83	1.36	0.48	725	2.65	1.27	0.48	766	2.47	1.19	0.48	793
24	24	2.99	1.08	0.36	752	2.81	1.01	0.36	787	2.65	0.95	0.36	821
25	20	2.68	1.71	0.64	698	2.50	1.60	0.64	732	2.31	1.48	0.64	773
25	22	2.83	1.47	0.52	725	2.65	1.38	0.52	766	2.47	1.28	0.52	793
25	24	2.99	1.20	0.40	752	2.81	1.12	0.40	787	2.65	1.06	0.40	821
26	18	2.55	2.04	0.80	670	2.34	1.87	0.80	711	2.16	1.73	0.80	739
26	20	2.68	1.82	0.68	698	2.50	1.70	0.68	732	2.31	1.57	0.68	773
26	22	2.83	1.59	0.56	725	2.65	1.49	0.56	766	2.47	1.38	0.56	793
26	24	2.99	1.32	0.44	752	2.81	1.24	0.44	787	2.65	1.17	0.44	821
26	26	3.15	1.01	0.32	780	2.96	0.95	0.32	814	2.78	0.89	0.32	848
27	18	2.55	2.14	0.84	670	2.34	1.97	0.84	711	2.16	1.81	0.84	739
27	20	2.68	1.93	0.72	698	2.50	1.80	0.72	732	2.31	1.67	0.72	773
27	22	2.83	1.70	0.60	725	2.65	1.59	0.60	766	2.47	1.48	0.60	793
27	24	2.99	1.44	0.48	752	2.81	1.35	0.48	787	2.65	1.27	0.48	821
27	26	3.15	1.13	0.36	780	2.96	1.07	0.36	814	2.78	1.00	0.36	848
28	18	2.55	2.24	0.88	670	2.34	2.06	0.88	711	2.16	1.90	0.88	739
28	20	2.68	2.04	0.76	698	2.50	1.90	0.76	732	2.31	1.76	0.76	773
28	22	2.83	1.81	0.64	725	2.65	1.70	0.64	766	2.47	1.58	0.64	793
28	24	2.99	1.55	0.52	752	2.81	1.46	0.52	787	2.65	1.38	0.52	821
28	26	3.15	1.26	0.40	780	2.96	1.19	0.40	814	2.78	1.11	0.40	848
29	18	2.55	2.34	0.92	670	2.34	2.15	0.92	711	2.16	1.99	0.92	739
29	20	2.68	2.14	0.80	698	2.50	2.00	0.80	732	2.31	1.85	0.80	773
29	22	2.83	1.93	0.68	725	2.65	1.80	0.68	766	2.47	1.68	0.68	793
29	24	2.99	1.67	0.56	752	2.81	1.57	0.56	787	2.65	1.49	0.56	821
29	26	3.15	1.38	0.44	780	2.96	1.30	0.44	814	2.78	1.22	0.44	848
30	18	2.55	2.45	0.96	670	2.34	2.25	0.96	711	2.16	2.07	0.96	739
30	20	2.68	2.25	0.84	698	2.50	2.10	0.84	732	2.31	1.94	0.84	773
30	22	2.83	2.04	0.72	725	2.65	1.91	0.72	766	2.47	1.78	0.72	793
30	24	2.99	1.79	0.60	752	2.81	1.68	0.60	787	2.65	1.59	0.60	821
30	26	3.15	1.51	0.48	780	2.96	1.42	0.48	814	2.78	1.34	0.48	848
31	18	2.55	2.55	1.00	670	2.34	2.34	1.00	711	2.16	2.16	1.00	739
31	20	2.68	2.36	0.88	698	2.50	2.20	0.88	732	2.31	2.04	0.88	773
31	22	2.83	2.15	0.76	725	2.65	2.02	0.76	766	2.47	1.88	0.76	793
31	24	2.99	1.91	0.64	752	2.81	1.80	0.64	787	2.65	1.70	0.64	821
31	26	3.15	1.64	0.52	780	2.96	1.54	0.52	814	2.78	1.45	0.52	848
32	18	2.55	2.55	1.00	670	2.34	2.34	1.00	711	2.16	2.16	1.00	739
32	20	2.68	2.46	0.92	698	2.50	2.30	0.92	732	2.31	2.13	0.92	773
32	22	2.83	2.27	0.80	725	2.65	2.12	0.80	766	2.47	1.98	0.80	793
32	24	2.99	2.03	0.68	752	2.81	1.91	0.68	787	2.65	1.80	0.68	821
32	26	3.15	1.76	0.56	780	2.96	1.66	0.56	814	2.78	1.56	0.56	848

Note: Q : Total capacity (kW) SHF : Sensible heat factor D.B.: Dry-bulb temperature
SHC : Sensible heat capacity (kW) INPUT : Total power input (W) W.B.: Wet-bulb temperature

COOLING operation at Rated frequency
SLZ-M35FA / SUZ-KA35VA6
CAPACITY : 3.5(kW) INPUT : 972(W) SHF : 0.72

		OUTDOOR DB(℃)															
INDOOR	INDOOR	21				25				27				30			
DB(℃)	WB(℃)	Q	SHC	SHF	INPUT	Q	SHC	SHF	INPUT	Q	SHC	SHF	INPUT	Q	SHC	SHF	INPUT
21	18	4.11	2.22	0.54	778	3.94	2.13	0.54	816	3.78	2.04	0.54	855	3.64	1.97	0.54	894
21	20	4.29	1.80	0.42	816	4.11	1.73	0.42	865	3.99	1.68	0.42	885	3.85	1.62	0.42	923
22	18	4.11	2.39	0.58	778	3.94	2.28	0.58	816	3.78	2.19	0.58	855	3.64	2.11	0.58	894
22	20	4.29	1.97	0.46	816	4.11	1.89	0.46	865	3.99	1.84	0.46	885	3.85	1.77	0.46	923
22	22	4.46	1.52	0.34	846	4.31	1.46	0.34	899	4.20	1.43	0.34	923	4.03	1.37	0.34	962
23	18	4.11	2.55	0.62	778	3.94	2.44	0.62	816	3.78	2.34	0.62	855	3.64	2.26	0.62	894
23	20	4.29	2.14	0.50	816	4.11	2.06	0.50	865	3.99	2.00	0.50	885	3.85	1.93	0.50	923
23	22	4.46	1.70	0.38	846	4.31	1.64	0.38	899	4.20	1.60	0.38	923	4.03	1.53	0.38	962
24	18	4.11	2.71	0.66	778	3.94	2.60	0.66	816	3.78	2.49	0.66	855	3.64	2.40	0.66	894
24	20	4.29	2.32	0.54	816	4.11	2.22	0.54	865	3.99	2.15	0.54	885	3.85	2.08	0.54	923
24	22	4.46	1.87	0.42	846	4.31	1.81	0.42	899	4.20	1.76	0.42	923	4.03	1.69	0.42	962
24	24	4.69	1.41	0.30	885	4.52	1.35	0.30	933	4.41	1.32	0.30	962	4.27	1.28	0.30	1011
25	20	4.29	2.49	0.58	816	4.11	2.39	0.58	865	3.99	2.31	0.58	885	3.85	2.23	0.58	923
25	22	4.46	2.05	0.46	846	4.31	1.98	0.46	899	4.20	1.93	0.46	923	4.03	1.85	0.46	962
25	24	4.69	1.59	0.34	885	4.52	1.54	0.34	933	4.41	1.50	0.34	962	4.27	1.45	0.34	1011
26	18	4.11	3.04	0.74	778	3.94	2.91	0.74	816	3.78	2.80	0.74	855	3.64	2.69	0.74	894
26	20	4.29	2.66	0.62	816	4.11	2.55	0.62	865	3.99	2.47	0.62	885	3.85	2.39	0.62	923
26	22	4.46	2.23	0.50	846	4.31	2.15	0.50	899	4.20	2.10	0.50	923	4.03	2.01	0.50	962
26	24	4.69	1.78	0.38	885	4.52	1.72	0.38	933	4.41	1.68	0.38	962	4.27	1.62	0.38	1011
26	26	4.83	1.26	0.26	933	4.69	1.22	0.26	982	4.62	1.20	0.26	1011	4.48	1.16	0.26	1040
27	18	4.11	3.21	0.78	778	3.94	3.07	0.78	816	3.78	2.95	0.78	855	3.64	2.84	0.78	894
27	20	4.29	2.83	0.66	816	4.11	2.71	0.66	865	3.99	2.63	0.66	885	3.85	2.54	0.66	923
27	22	4.46	2.41	0.54	846	4.31	2.32	0.54	899	4.20	2.27	0.54	923	4.03	2.17	0.54	962
27	24	4.69	1.97	0.42	885	4.52	1.90	0.42	933	4.41	1.85	0.42	962	4.27	1.79	0.42	1011
27	26	4.83	1.45	0.30	933	4.69	1.41	0.30	982	4.62	1.39	0.30	1011	4.48	1.34	0.30	1040
28	18	4.11	3.37	0.82	778	3.94	3.23	0.82	816	3.78	3.10	0.82	855	3.64	2.98	0.82	894
28	20	4.29	3.00	0.70	816	4.11	2.88	0.70	865	3.99	2.79	0.70	885	3.85	2.70	0.70	923
28	22	4.46	2.59	0.58	846	4.31	2.50	0.58	899	4.20	2.44	0.58	923	4.03	2.33	0.58	962
28	24	4.69	2.16	0.46	885	4.52	2.08	0.46	933	4.41	2.03	0.46	962	4.27	1.96	0.46	1011
28	26	4.83	1.64	0.34	933	4.69	1.59	0.34	982	4.62	1.57	0.34	1011	4.48	1.52	0.34	1040
29	18	4.11	3.54	0.86	778	3.94	3.39	0.86	816	3.78	3.25	0.86	855	3.64	3.13	0.86	894
29	20	4.29	3.17	0.74	816	4.11	3.04	0.74	865	3.99	2.95	0.74	885	3.85	2.85	0.74	923
29	22	4.46	2.77	0.62	846	4.31	2.67	0.62	899	4.20	2.60	0.62	923	4.03	2.50	0.62	962
29	24	4.69	2.35	0.50	885	4.52	2.26	0.50	933	4.41	2.21	0.50	962	4.27	2.14	0.50	1011
29	26	4.83	1.84	0.38	933	4.69	1.78	0.38	982	4.62	1.76	0.38	1011	4.48	1.70	0.38	1040
30	18	4.11	3.70	0.90	778	3.94	3.54	0.90	816	3.78	3.40	0.90	855	3.64	3.28	0.90	894
30	20	4.29	3.34	0.78	816	4.11	3.21	0.78	865	3.99	3.11	0.78	885	3.85	3.00	0.78	923
30	22	4.46	2.95	0.66	846	4.31	2.84	0.66	899	4.20	2.77	0.66	923	4.03	2.66	0.66	962
30	24	4.69	2.53	0.54	885	4.52	2.44	0.54	933	4.41	2.38	0.54	962	4.27	2.31	0.54	1011
30	26	4.83	2.03	0.42	933	4.69	1.97	0.42	982	4.62	1.94	0.42	1011	4.48	1.88	0.42	1040
31	18	4.11	3.87	0.94	778	3.94	3.70	0.94	816	3.78	3.55	0.94	855	3.64	3.42	0.94	894
31	20	4.29	3.52	0.82	816	4.11	3.37	0.82	865	3.99	3.27	0.82	885	3.85	3.16	0.82	923
31	22	4.46	3.12	0.70	846	4.31	3.01	0.70	899	4.20	2.94	0.70	923	4.03	2.82	0.70	962
31	24	4.69	2.72	0.58	885	4.52	2.62	0.58	933	4.41	2.56	0.58	962	4.27	2.48	0.58	1011
31	26	4.83	2.22	0.46	933	4.69	2.16	0.46	982	4.62	2.13	0.46	1011	4.48	2.06	0.46	1040
32	18	4.11	4.03	0.98	778	3.94	3.86	0.98	816	3.78	3.70	0.98	855	3.64	3.57	0.98	894
32	20	4.29	3.69	0.86	816	4.11	3.54	0.86	865	3.99	3.43	0.86	885	3.85	3.31	0.86	923
32	22	4.46	3.30	0.74	846	4.31	3.19	0.74	899	4.20	3.11	0.74	923	4.03	2.98	0.74	962
32	24	4.69	2.91	0.62	885	4.52	2.80	0.62	933	4.41	2.73	0.62	962	4.27	2.65	0.62	1011
32	26	4.83	2.42	0.50	933	4.69	2.35	0.50	982	4.62	2.31	0.50	1011	4.48	2.24	0.50	1040

Note: Q : Total capacity (kW) SHF : Sensible heat factor D.B.: Dry-bulb temperature
SHC : Sensible heat capacity (kW) INPUT : Total power input (W) W.B.: Wet-bulb temperature

COOLING operation at Rated frequency
SLZ-M35FA / SUZ-KA35VA6
CAPACITY : 3.5(kW) INPUT : 972(W) SHF : 0.72

		OUTDOOR DB(℃)											
INDOOR	INDOOR	35				40				46			
DB(℃)	WB(℃)	Q	SHC	SHF	INPUT	Q	SHC	SHF	INPUT	Q	SHC	SHF	INPUT
21	18	3.43	1.85	0.54	953	3.15	1.70	0.54	1011	2.91	1.57	0.54	1050
21	20	3.61	1.51	0.42	991	3.36	1.41	0.42	1040	3.12	1.31	0.42	1098
22	18	3.43	1.99	0.58	953	3.15	1.83	0.58	1011	2.91	1.68	0.58	1050
22	20	3.61	1.66	0.46	991	3.36	1.55	0.46	1040	3.12	1.43	0.46	1098
22	22	3.82	1.30	0.34	1030	3.57	1.21	0.34	1089	3.33	1.13	0.34	1128
23	18	3.43	2.13	0.62	953	3.15	1.95	0.62	1011	2.91	1.80	0.62	1050
23	20	3.61	1.80	0.50	991	3.36	1.68	0.50	1040	3.12	1.56	0.50	1098
23	22	3.82	1.45	0.38	1030	3.57	1.36	0.38	1089	3.33	1.26	0.38	1128
24	18	3.43	2.26	0.66	953	3.15	2.08	0.66	1011	2.91	1.92	0.66	1050
24	20	3.61	1.95	0.54	991	3.36	1.81	0.54	1040	3.12	1.68	0.54	1098
24	22	3.82	1.60	0.42	1030	3.57	1.50	0.42	1089	3.33	1.40	0.42	1128
24	24	4.03	1.21	0.30	1069	3.78	1.13	0.30	1118	3.57	1.07	0.30	1166
25	20	3.61	2.09	0.58	991	3.36	1.95	0.58	1040	3.12	1.81	0.58	1098
25	22	3.82	1.75	0.46	1030	3.57	1.64	0.46	1089	3.33	1.53	0.46	1128
25	24	4.03	1.37	0.34	1069	3.78	1.29	0.34	1118	3.57	1.21	0.34	1166
26	18	3.43	2.54	0.74	953	3.15	2.33	0.74	1011	2.91	2.15	0.74	1050
26	20	3.61	2.24	0.62	991	3.36	2.08	0.62	1040	3.12	1.93	0.62	1098
26	22	3.82	1.91	0.50	1030	3.57	1.79	0.50	1089	3.33	1.66	0.50	1128
26	24	4.03	1.53	0.38	1069	3.78	1.44	0.38	1118	3.57	1.36	0.38	1166
26	26	4.24	1.10	0.26	1108	3.99	1.04	0.26	1157	3.75	0.97	0.26	1205
27	18	3.43	2.68	0.78	953	3.15	2.46	0.78	1011	2.91	2.27	0.78	1050
27	20	3.61	2.38	0.66	991	3.36	2.22	0.66	1040	3.12	2.06	0.66	1098
27	22	3.82	2.06	0.54	1030	3.57	1.93	0.54	1089	3.33	1.80	0.54	1128
27	24	4.03	1.69	0.42	1069	3.78	1.59	0.42	1118	3.57	1.50	0.42	1166
27	26	4.24	1.27	0.30	1108	3.99	1.20	0.30	1157	3.75	1.12	0.30	1205
28	18	3.43	2.81	0.82	953	3.15	2.58	0.82	1011	2.91	2.38	0.82	1050
28	20	3.61	2.52	0.70	991	3.36	2.35	0.70	1040	3.12	2.18	0.70	1098
28	22	3.82	2.21	0.58	1030	3.57	2.07	0.58	1089	3.33	1.93	0.58	1128
28	24	4.03	1.85	0.46	1069	3.78	1.74	0.46	1118	3.57	1.64	0.46	1166
28	26	4.24	1.44	0.34	1108	3.99	1.36	0.34	1157	3.75	1.27	0.34	1205
29	18	3.43	2.95	0.86	953	3.15	2.71	0.86	1011	2.91	2.50	0.86	1050
29	20	3.61	2.67	0.74	991	3.36	2.49	0.74	1040	3.12	2.31	0.74	1098
29	22	3.82	2.37	0.62	1030	3.57	2.21	0.62	1089	3.33	2.06	0.62	1128
29	24	4.03	2.01	0.50	1069	3.78	1.89	0.50	1118	3.57	1.79	0.50	1166
29	26	4.24	1.61	0.38	1108	3.99	1.52	0.38	1157	3.75	1.42	0.38	1205
30	18	3.43	3.09	0.90	953	3.15	2.84	0.90	1011	2.91	2.61	0.90	1050
30	20	3.61	2.81	0.78	991	3.36	2.62	0.78	1040	3.12	2.43	0.78	1098
30	22	3.82	2.52	0.66	1030	3.57	2.36	0.66	1089	3.33	2.19	0.66	1128
30	24	4.03	2.17	0.54	1069	3.78	2.04	0.54	1118	3.57	1.93	0.54	1166
30	26	4.24	1.78	0.42	1108	3.99	1.68	0.42	1157	3.75	1.57	0.42	1205
31	18	3.43	3.22	0.94	953	3.15	2.96	0.94	1011	2.91	2.73	0.94	1050
31	20	3.61	2.96	0.82	991	3.36	2.76	0.82	1040	3.12	2.55	0.82	1098
31	22	3.82	2.67	0.70	1030	3.57	2.50	0.70	1089	3.33	2.33	0.70	1128
31	24	4.03	2.33	0.58	1069	3.78	2.19	0.58	1118	3.57	2.07	0.58	1166
31	26	4.24	1.95	0.46	1108	3.99	1.84	0.46	1157	3.75	1.72	0.46	1205
32	18	3.43	3.36	0.98	953	3.15	3.09	0.98	1011	2.91	2.85	0.98	1050
32	20	3.61	3.10	0.86	991	3.36	2.89	0.86	1040	3.12	2.68	0.86	1098
32	22	3.82	2.82	0.74	1030	3.57	2.64	0.74	1089	3.33	2.46	0.74	1128
32	24	4.03	2.50	0.62	1069	3.78	2.34	0.62	1118	3.57	2.21	0.62	1166
32	26	4.24	2.12	0.50	1108	3.99	2.00	0.50	1157	3.75	1.87	0.50	1205

Note: Q : Total capacity (kW) SHF : Sensible heat factor D.B.: Dry-bulb temperature
SHC : Sensible heat capacity (kW) INPUT : Total power input (W) W.B.: Wet-bulb temperature

COOLING operation at Rated frequency
SLZ-M50FA / SUZ-KA50VA6
CAPACITY : 4.6(kW) INPUT :1,394(W) SHF : 0.68

		OUTDOOR DB(℃)															
INDOOR	INDOOR	21				25				27				30			
DB(℃)	WB(℃)	Q	SHC	SHF	INPUT	Q	SHC	SHF	INPUT	Q	SHC	SHF	INPUT	Q	SHC	SHF	INPUT
21	18	5.41	2.70	0.50	1115	5.18	2.59	0.50	1171	4.97	2.48	0.50	1227	4.78	2.39	0.50	1282
21	20	5.64	2.14	0.38	1171	5.41	2.05	0.38	1241	5.24	1.99	0.38	1269	5.06	1.92	0.38	1324
22	18	5.41	2.92	0.54	1115	5.18	2.79	0.54	1171	4.97	2.68	0.54	1227	4.78	2.58	0.54	1282
22	20	5.64	2.37	0.42	1171	5.41	2.27	0.42	1241	5.24	2.20	0.42	1269	5.06	2.13	0.42	1324
22	22	5.87	1.76	0.30	1213	5.66	1.70	0.30	1289	5.52	1.66	0.30	1324	5.29	1.59	0.30	1380
23	18	5.41	3.13	0.58	1115	5.18	3.00	0.58	1171	4.97	2.88	0.58	1227	4.78	2.77	0.58	1282
23	20	5.64	2.59	0.46	1171	5.41	2.49	0.46	1241	5.24	2.41	0.46	1269	5.06	2.33	0.46	1324
23	22	5.87	1.99	0.34	1213	5.66	1.92	0.34	1289	5.52	1.88	0.34	1324	5.29	1.80	0.34	1380
24	18	5.41	3.35	0.62	1115	5.18	3.21	0.62	1171	4.97	3.08	0.62	1227	4.78	2.97	0.62	1282
24	20	5.64	2.82	0.50	1171	5.41	2.70	0.50	1241	5.24	2.62	0.50	1269	5.06	2.53	0.50	1324
24	22	5.87	2.23	0.38	1213	5.66	2.15	0.38	1289	5.52	2.10	0.38	1324	5.29	2.01	0.38	1380
24	24	6.16	1.60	0.26	1269	5.93	1.54	0.26	1338	5.80	1.51	0.26	1380	5.61	1.46	0.26	1450
25	20	5.64	3.04	0.54	1171	5.41	2.92	0.54	1241	5.24	2.83	0.54	1269	5.06	2.73	0.54	1324
25	22	5.87	2.46	0.42	1213	5.66	2.38	0.42	1289	5.52	2.32	0.42	1324	5.29	2.22	0.42	1380
25	24	6.16	1.85	0.30	1269	5.93	1.78	0.30	1338	5.80	1.74	0.30	1380	5.61	1.68	0.30	1450
26	18	5.41	3.78	0.70	1115	5.18	3.62	0.70	1171	4.97	3.48	0.70	1227	4.78	3.35	0.70	1282
26	20	5.64	3.27	0.58	1171	5.41	3.13	0.58	1241	5.24	3.04	0.58	1269	5.06	2.93	0.58	1324
26	22	5.87	2.70	0.46	1213	5.66	2.60	0.46	1289	5.52	2.54	0.46	1324	5.29	2.43	0.46	1380
26	24	6.16	2.10	0.34	1269	5.93	2.02	0.34	1338	5.80	1.97	0.34	1380	5.61	1.91	0.34	1450
26	26	6.35	1.40	0.22	1338	6.16	1.36	0.22	1408	6.07	1.34	0.22	1450	5.89	1.30	0.22	1492
27	18	5.41	4.00	0.74	1115	5.18	3.83	0.74	1171	4.97	3.68	0.74	1227	4.78	3.54	0.74	1282
27	20	5.64	3.49	0.62	1171	5.41	3.35	0.62	1241	5.24	3.25	0.62	1269	5.06	3.14	0.62	1324
27	22	5.87	2.93	0.50	1213	5.66	2.83	0.50	1289	5.52	2.76	0.50	1324	5.29	2.65	0.50	1380
27	24	6.16	2.34	0.38	1269	5.93	2.25	0.38	1338	5.80	2.20	0.38	1380	5.61	2.13	0.38	1450
27	26	6.35	1.65	0.26	1338	6.16	1.60	0.26	1408	6.07	1.58	0.26	1450	5.89	1.53	0.26	1492
28	18	5.41	4.22	0.78	1115	5.18	4.04	0.78	1171	4.97	3.88	0.78	1227	4.78	3.73	0.78	1282
28	20	5.64	3.72	0.66	1171	5.41	3.57	0.66	1241	5.24	3.46	0.66	1269	5.06	3.34	0.66	1324
28	22	5.87	3.17	0.54	1213	5.66	3.06	0.54	1289	5.52	2.98	0.54	1324	5.29	2.86	0.54	1380
28	24	6.16	2.59	0.42	1269	5.93	2.49	0.42	1338	5.80	2.43	0.42	1380	5.61	2.36	0.42	1450
28	26	6.35	1.90	0.30	1338	6.16	1.85	0.30	1408	6.07	1.82	0.30	1450	5.89	1.77	0.30	1492
29	18	5.41	4.43	0.82	1115	5.18	4.24	0.82	1171	4.97	4.07	0.82	1227	4.78	3.92	0.82	1282
29	20	5.64	3.94	0.70	1171	5.41	3.78	0.70	1241	5.24	3.67	0.70	1269	5.06	3.54	0.70	1324
29	22	5.87	3.40	0.58	1213	5.66	3.28	0.58	1289	5.52	3.20	0.58	1324	5.29	3.07	0.58	1380
29	24	6.16	2.84	0.46	1269	5.93	2.73	0.46	1338	5.80	2.67	0.46	1380	5.61	2.58	0.46	1450
29	26	6.35	2.16	0.34	1338	6.16	2.10	0.34	1408	6.07	2.06	0.34	1450	5.89	2.00	0.34	1492
30	18	5.41	4.65	0.86	1115	5.18	4.45	0.86	1171	4.97	4.27	0.86	1227	4.78	4.11	0.86	1282
30	20	5.64	4.17	0.74	1171	5.41	4.00	0.74	1241	5.24	3.88	0.74	1269	5.06	3.74	0.74	1324
30	22	5.87	3.64	0.62	1213	5.66	3.51	0.62	1289	5.52	3.42	0.62	1324	5.29	3.28	0.62	1380
30	24	6.16	3.08	0.50	1269	5.93	2.97	0.50	1338	5.80	2.90	0.50	1380	5.61	2.81	0.50	1450
30	26	6.35	2.41	0.38	1338	6.16	2.34	0.38	1408	6.07	2.31	0.38	1450	5.89	2.24	0.38	1492
31	18	5.41	4.86	0.90	1115	5.18	4.66	0.90	1171	4.97	4.47	0.90	1227	4.78	4.31	0.90	1282
31	20	5.64	4.40	0.78	1171	5.41	4.22	0.78	1241	5.24	4.09	0.78	1269	5.06	3.95	0.78	1324
31	22	5.87	3.87	0.66	1213	5.66	3.73	0.66	1289	5.52	3.64	0.66	1324	5.29	3.49	0.66	1380
31	24	6.16	3.33	0.54	1269	5.93	3.20	0.54	1338	5.80	3.13	0.54	1380	5.61	3.03	0.54	1450
31	26	6.35	2.67	0.42	1338	6.16	2.59	0.42	1408	6.07	2.55	0.42	1450	5.89	2.47	0.42	1492
32	18	5.41	5.08	0.94	1115	5.18	4.86	0.94	1171	4.97	4.67	0.94	1227	4.78	4.50	0.94	1282
32	20	5.64	4.62	0.82	1171	5.41	4.43	0.82	1241	5.24	4.30	0.82	1269	5.06	4.15	0.82	1324
32	22	5.87	4.11	0.70	1213	5.66	3.96	0.70	1289	5.52	3.86	0.70	1324	5.29	3.70	0.70	1380
32	24	6.16	3.58	0.58	1269	5.93	3.44	0.58	1338	5.80	3.36	0.58	1380	5.61	3.25	0.58	1450
32	26	6.35	2.92	0.46	1338	6.16	2.84	0.46	1408	6.07	2.79	0.46	1450	5.89	2.71	0.46	1492

Note: Q : Total capacity (kW) SHF : Sensible heat factor D.B.: Dry-bulb temperature
SHC : Sensible heat capacity (kW) INPUT : Total power input (W) W.B.: Wet-bulb temperature

COOLING operation at Rated frequency
SLZ-M50FA / SUZ-KA50VA6
CAPACITY : 4.6(kW) INPUT :1,394(W) SHF : 0.68

		OUTDOOR DB(℃)											
INDOOR	INDOOR	35				40				46			
DB(℃)	WB(℃)	Q	SHC	SHF	INPUT	Q	SHC	SHF	INPUT	Q	SHC	SHF	INPUT
21	18	4.51	2.25	0.50	1366	4.14	2.07	0.50	1450	3.82	1.91	0.50	1506
21	20	4.74	1.80	0.38	1422	4.42	1.68	0.38	1492	4.09	1.56	0.38	1575
22	18	4.51	2.43	0.54	1366	4.14	2.24	0.54	1450	3.82	2.06	0.54	1506
22	20	4.74	1.99	0.42	1422	4.42	1.85	0.42	1492	4.09	1.72	0.42	1575
22	22	5.01	1.50	0.30	1478	4.69	1.41	0.30	1561	4.37	1.31	0.30	1617
23	18	4.51	2.61	0.58	1366	4.14	2.40	0.58	1450	3.82	2.21	0.58	1506
23	20	4.74	2.18	0.46	1422	4.42	2.03	0.46	1492	4.09	1.88	0.46	1575
23	22	5.01	1.70	0.34	1478	4.69	1.60	0.34	1561	4.37	1.49	0.34	1617
24	18	4.51	2.79	0.62	1366	4.14	2.57	0.62	1450	3.82	2.37	0.62	1506
24	20	4.74	2.37	0.50	1422	4.42	2.21	0.50	1492	4.09	2.05	0.50	1575
24	22	5.01	1.91	0.38	1478	4.69	1.78	0.38	1561	4.37	1.66	0.38	1617
24	24	5.29	1.38	0.26	1533	4.97	1.29	0.26	1603	4.69	1.22	0.26	1673
25	20	4.74	2.56	0.54	1422	4.42	2.38	0.54	1492	4.09	2.21	0.54	1575
25	22	5.01	2.11	0.42	1478	4.69	1.97	0.42	1561	4.37	1.84	0.42	1617
25	24	5.29	1.59	0.30	1533	4.97	1.49	0.30	1603	4.69	1.41	0.30	1673
26	18	4.51	3.16	0.70	1366	4.14	2.90	0.70	1450	3.82	2.67	0.70	1506
26	20	4.74	2.75	0.58	1422	4.42	2.56	0.58	1492	4.09	2.37	0.58	1575
26	22	5.01	2.31	0.46	1478	4.69	2.16	0.46	1561	4.37	2.01	0.46	1617
26	24	5.29	1.80	0.34	1533	4.97	1.69	0.34	1603	4.69	1.60	0.34	1673
26	26	5.57	1.22	0.22	1589	5.24	1.15	0.22	1659	4.92	1.08	0.22	1729
27	18	4.51	3.34	0.74	1366	4.14	3.06	0.74	1450	3.82	2.83	0.74	1506
27	20	4.74	2.94	0.62	1422	4.42	2.74	0.62	1492	4.09	2.54	0.62	1575
27	22	5.01	2.51	0.50	1478	4.69	2.35	0.50	1561	4.37	2.19	0.50	1617
27	24	5.29	2.01	0.38	1533	4.97	1.89	0.38	1603	4.69	1.78	0.38	1673
27	26	5.57	1.45	0.26	1589	5.24	1.36	0.26	1659	4.92	1.28	0.26	1729
28	18	4.51	3.52	0.78	1366	4.14	3.23	0.78	1450	3.82	2.98	0.78	1506
28	20	4.74	3.13	0.66	1422	4.42	2.91	0.66	1492	4.09	2.70	0.66	1575
28	22	5.01	2.71	0.54	1478	4.69	2.53	0.54	1561	4.37	2.36	0.54	1617
28	24	5.29	2.22	0.42	1533	4.97	2.09	0.42	1603	4.69	1.97	0.42	1673
28	26	5.57	1.67	0.30	1589	5.24	1.57	0.30	1659	4.92	1.48	0.30	1729
29	18	4.51	3.70	0.82	1366	4.14	3.39	0.82	1450	3.82	3.13	0.82	1506
29	20	4.74	3.32	0.70	1422	4.42	3.09	0.70	1492	4.09	2.87	0.70	1575
29	22	5.01	2.91	0.58	1478	4.69	2.72	0.58	1561	4.37	2.53	0.58	1617
29	24	5.29	2.43	0.46	1533	4.97	2.29	0.46	1603	4.69	2.16	0.46	1673
29	26	5.57	1.89	0.34	1589	5.24	1.78	0.34	1659	4.92	1.67	0.34	1729
30	18	4.51	3.88	0.86	1366	4.14	3.56	0.86	1450	3.82	3.28	0.86	1506
30	20	4.74	3.51	0.74	1422	4.42	3.27	0.74	1492	4.09	3.03	0.74	1575
30	22	5.01	3.11	0.62	1478	4.69	2.91	0.62	1561	4.37	2.71	0.62	1617
30	24	5.29	2.65	0.50	1533	4.97	2.48	0.50	1603	4.69	2.35	0.50	1673
30	26	5.57	2.12	0.38	1589	5.24	1.99	0.38	1659	4.92	1.87	0.38	1729
31	18	4.51	4.06	0.90	1366	4.14	3.73	0.90	1450	3.82	3.44	0.90	1506
31	20	4.74	3.70	0.78	1422	4.42	3.44	0.78	1492	4.09	3.19	0.78	1575
31	22	5.01	3.31	0.66	1478	4.69	3.10	0.66	1561	4.37	2.88	0.66	1617
31	24	5.29	2.86	0.54	1533	4.97	2.68	0.54	1603	4.69	2.53	0.54	1673
31	26	5.57	2.34	0.42	1589	5.24	2.20	0.42	1659	4.92	2.07	0.42	1729
32	18	4.51	4.24	0.94	1366	4.14	3.89	0.94	1450	3.82	3.59	0.94	1506
32	20	4.74	3.89	0.82	1422	4.42	3.62	0.82	1492	4.09	3.36	0.82	1575
32	22	5.01	3.51	0.70	1478	4.69	3.28	0.70	1561	4.37	3.06	0.70	1617
32	24	5.29	3.07	0.58	1533	4.97	2.88	0.58	1603	4.69	2.72	0.58	1673
32	26	5.57	2.56	0.46	1589	5.24	2.41	0.46	1659	4.92	2.26	0.46	1729

Note: Q : Total capacity (kW) SHF : Sensible heat factor D.B.: Dry-bulb temperature
SHC : Sensible heat capacity (kW) INPUT : Total power input (W) W.B.: Wet-bulb temperature

COOLING operation at Rated frequency
SLZ-M60FA / SUZ-KA60VA6
CAPACITY : 5.6(kW) INPUT :1,767(W) SHF : 0.68

		OUTDOOR DB(℃)															
INDOOR	INDOOR	21				25				27				30			
DB(℃)	WB(℃)	Q	SHC	SHF	INPUT	Q	SHC	SHF	INPUT	Q	SHC	SHF	INPUT	Q	SHC	SHF	INPUT
21	18	6.58	3.29	0.50	1414	6.30	3.15	0.50	1484	6.05	3.02	0.50	1555	5.82	2.91	0.50	1626
21	20	6.86	2.61	0.38	1484	6.58	2.50	0.38	1573	6.38	2.43	0.38	1608	6.16	2.34	0.38	1679
22	18	6.58	3.55	0.54	1414	6.30	3.40	0.54	1484	6.05	3.27	0.54	1555	5.82	3.14	0.54	1626
22	20	6.86	2.88	0.42	1484	6.58	2.76	0.42	1573	6.38	2.68	0.42	1608	6.16	2.59	0.42	1679
22	22	7.14	2.14	0.30	1537	6.89	2.07	0.30	1634	6.72	2.02	0.30	1679	6.44	1.93	0.30	1749
23	18	6.58	3.82	0.58	1414	6.30	3.65	0.58	1484	6.05	3.51	0.58	1555	5.82	3.38	0.58	1626
23	20	6.86	3.16	0.46	1484	6.58	3.03	0.46	1573	6.38	2.94	0.46	1608	6.16	2.83	0.46	1679
23	22	7.14	2.43	0.34	1537	6.89	2.34	0.34	1634	6.72	2.28	0.34	1679	6.44	2.19	0.34	1749
24	18	6.58	4.08	0.62	1414	6.30	3.91	0.62	1484	6.05	3.75	0.62	1555	5.82	3.61	0.62	1626
24	20	6.86	3.43	0.50	1484	6.58	3.29	0.50	1573	6.38	3.19	0.50	1608	6.16	3.08	0.50	1679
24	22	7.14	2.71	0.38	1537	6.89	2.62	0.38	1634	6.72	2.55	0.38	1679	6.44	2.45	0.38	1749
24	24	7.50	1.95	0.26	1608	7.22	1.88	0.26	1696	7.06	1.83	0.26	1749	6.83	1.78	0.26	1838
25	20	6.86	3.70	0.54	1484	6.58	3.55	0.54	1573	6.38	3.45	0.54	1608	6.16	3.33	0.54	1679
25	22	7.14	3.00	0.42	1537	6.89	2.89	0.42	1634	6.72	2.82	0.42	1679	6.44	2.70	0.42	1749
25	24	7.50	2.25	0.30	1608	7.22	2.17	0.30	1696	7.06	2.12	0.30	1749	6.83	2.05	0.30	1838
26	18	6.58	4.61	0.70	1414	6.30	4.41	0.70	1484	6.05	4.23	0.70	1555	5.82	4.08	0.70	1626
26	20	6.86	3.98	0.58	1484	6.58	3.82	0.58	1573	6.38	3.70	0.58	1608	6.16	3.57	0.58	1679
26	22	7.14	3.28	0.46	1537	6.89	3.17	0.46	1634	6.72	3.09	0.46	1679	6.44	2.96	0.46	1749
26	24	7.50	2.55	0.34	1608	7.22	2.46	0.34	1696	7.06	2.40	0.34	1749	6.83	2.32	0.34	1838
26	26	7.73	1.70	0.22	1696	7.50	1.65	0.22	1785	7.39	1.63	0.22	1838	7.17	1.58	0.22	1891
27	18	6.58	4.87	0.74	1414	6.30	4.66	0.74	1484	6.05	4.48	0.74	1555	5.82	4.31	0.74	1626
27	20	6.86	4.25	0.62	1484	6.58	4.08	0.62	1573	6.38	3.96	0.62	1608	6.16	3.82	0.62	1679
27	22	7.14	3.57	0.50	1537	6.89	3.44	0.50	1634	6.72	3.36	0.50	1679	6.44	3.22	0.50	1749
27	24	7.50	2.85	0.38	1608	7.22	2.75	0.38	1696	7.06	2.68	0.38	1749	6.83	2.60	0.38	1838
27	26	7.73	2.01	0.26	1696	7.50	1.95	0.26	1785	7.39	1.92	0.26	1838	7.17	1.86	0.26	1891
28	18	6.58	5.13	0.78	1414	6.30	4.91	0.78	1484	6.05	4.72	0.78	1555	5.82	4.54	0.78	1626
28	20	6.86	4.53	0.66	1484	6.58	4.34	0.66	1573	6.38	4.21	0.66	1608	6.16	4.07	0.66	1679
28	22	7.14	3.86	0.54	1537	6.89	3.72	0.54	1634	6.72	3.63	0.54	1679	6.44	3.48	0.54	1749
28	24	7.50	3.15	0.42	1608	7.22	3.03	0.42	1696	7.06	2.96	0.42	1749	6.83	2.87	0.42	1838
28	26	7.73	2.32	0.30	1696	7.50	2.25	0.30	1785	7.39	2.22	0.30	1838	7.17	2.15	0.30	1891
29	18	6.58	5.40	0.82	1414	6.30	5.17	0.82	1484	6.05	4.96	0.82	1555	5.82	4.78	0.82	1626
29	20	6.86	4.80	0.70	1484	6.58	4.61	0.70	1573	6.38	4.47	0.70	1608	6.16	4.31	0.70	1679
29	22	7.14	4.14	0.58	1537	6.89	4.00	0.58	1634	6.72	3.90	0.58	1679	6.44	3.74	0.58	1749
29	24	7.50	3.45	0.46	1608	7.22	3.32	0.46	1696	7.06	3.25	0.46	1749	6.83	3.14	0.46	1838
29	26	7.73	2.63	0.34	1696	7.50	2.55	0.34	1785	7.39	2.51	0.34	1838	7.17	2.44	0.34	1891
30	18	6.58	5.66	0.86	1414	6.30	5.42	0.86	1484	6.05	5.20	0.86	1555	5.82	5.01	0.86	1626
30	20	6.86	5.08	0.74	1484	6.58	4.87	0.74	1573	6.38	4.72	0.74	1608	6.16	4.56	0.74	1679
30	22	7.14	4.43	0.62	1537	6.89	4.27	0.62	1634	6.72	4.17	0.62	1679	6.44	3.99	0.62	1749
30	24	7.50	3.75	0.50	1608	7.22	3.61	0.50	1696	7.06	3.53	0.50	1749	6.83	3.42	0.50	1838
30	26	7.73	2.94	0.38	1696	7.50	2.85	0.38	1785	7.39	2.81	0.38	1838	7.17	2.72	0.38	1891
31	18	6.58	5.92	0.90	1414	6.30	5.67	0.90	1484	6.05	5.44	0.90	1555	5.82	5.24	0.90	1626
31	20	6.86	5.35	0.78	1484	6.58	5.13	0.78	1573	6.38	4.98	0.78	1608	6.16	4.80	0.78	1679
31	22	7.14	4.71	0.66	1537	6.89	4.55	0.66	1634	6.72	4.44	0.66	1679	6.44	4.25	0.66	1749
31	24	7.50	4.05	0.54	1608	7.22	3.90	0.54	1696	7.06	3.81	0.54	1749	6.83	3.69	0.54	1838
31	26	7.73	3.25	0.42	1696	7.50	3.15	0.42	1785	7.39	3.10	0.42	1838	7.17	3.01	0.42	1891
32	18	6.58	6.19	0.94	1414	6.30	5.92	0.94	1484	6.05	5.69	0.94	1555	5.82	5.47	0.94	1626
32	20	6.86	5.63	0.82	1484	6.58	5.40	0.82	1573	6.38	5.23	0.82	1608	6.16	5.05	0.82	1679
32	22	7.14	5.00	0.70	1537	6.89	4.82	0.70	1634	6.72	4.70	0.70	1679	6.44	4.51	0.70	1749
32	24	7.50	4.35	0.58	1608	7.22	4.19	0.58	1696	7.06	4.09	0.58	1749	6.83	3.96	0.58	1838
32	26	7.73	3.55	0.46	1696	7.50	3.45	0.46	1785	7.39	3.40	0.46	1838	7.17	3.30	0.46	1891

Note: Q : Total capacity (kW) SHF : Sensible heat factor D.B.: Dry-bulb temperature
SHC : Sensible heat capacity (kW) INPUT : Total power input (W) W.B.: Wet-bulb temperature

COOLING operation at Rated frequency
SLZ-M60FA / SUZ-KA60VA6
CAPACITY : 5.6(kW) INPUT :1,767(W) SHF : 0.68

		OUTDOOR DB(℃)											
INDOOR	INDOOR	35				40				46			
DB(℃)	WB(℃)	Q	SHC	SHF	INPUT	Q	SHC	SHF	INPUT	Q	SHC	SHF	INPUT
21	18	5.49	2.74	0.50	1732	5.04	2.52	0.50	1838	4.65	2.32	0.50	1908
21	20	5.77	2.19	0.38	1802	5.38	2.04	0.38	1891	4.98	1.89	0.38	1997
22	18	5.49	2.96	0.54	1732	5.04	2.72	0.54	1838	4.65	2.51	0.54	1908
22	20	5.77	2.42	0.42	1802	5.38	2.26	0.42	1891	4.98	2.09	0.42	1997
22	22	6.10	1.83	0.30	1873	5.71	1.71	0.30	1979	5.32	1.60	0.30	2050
23	18	5.49	3.18	0.58	1732	5.04	2.92	0.58	1838	4.65	2.70	0.58	1908
23	20	5.77	2.65	0.46	1802	5.38	2.47	0.46	1891	4.98	2.29	0.46	1997
23	22	6.10	2.08	0.34	1873	5.71	1.94	0.34	1979	5.32	1.81	0.34	2050
24	18	5.49	3.40	0.62	1732	5.04	3.12	0.62	1838	4.65	2.88	0.62	1908
24	20	5.77	2.88	0.50	1802	5.38	2.69	0.50	1891	4.98	2.49	0.50	1997
24	22	6.10	2.32	0.38	1873	5.71	2.17	0.38	1979	5.32	2.02	0.38	2050
24	24	6.44	1.67	0.26	1944	6.05	1.57	0.26	2032	5.71	1.49	0.26	2120
25	20	5.77	3.11	0.54	1802	5.38	2.90	0.54	1891	4.98	2.69	0.54	1997
25	22	6.10	2.56	0.42	1873	5.71	2.40	0.42	1979	5.32	2.23	0.42	2050
25	24	6.44	1.93	0.30	1944	6.05	1.81	0.30	2032	5.71	1.71	0.30	2120
26	18	5.49	3.84	0.70	1732	5.04	3.53	0.70	1838	4.65	3.25	0.70	1908
26	20	5.77	3.35	0.58	1802	5.38	3.12	0.58	1891	4.98	2.89	0.58	1997
26	22	6.10	2.81	0.46	1873	5.71	2.63	0.46	1979	5.32	2.45	0.46	2050
26	24	6.44	2.19	0.34	1944	6.05	2.06	0.34	2032	5.71	1.94	0.34	2120
26	26	6.78	1.49	0.22	2014	6.38	1.40	0.22	2103	5.99	1.32	0.22	2191
27	18	5.49	4.06	0.74	1732	5.04	3.73	0.74	1838	4.65	3.44	0.74	1908
27	20	5.77	3.58	0.62	1802	5.38	3.33	0.62	1891	4.98	3.09	0.62	1997
27	22	6.10	3.05	0.50	1873	5.71	2.86	0.50	1979	5.32	2.66	0.50	2050
27	24	6.44	2.45	0.38	1944	6.05	2.30	0.38	2032	5.71	2.17	0.38	2120
27	26	6.78	1.76	0.26	2014	6.38	1.66	0.26	2103	5.99	1.56	0.26	2191
28	18	5.49	4.28	0.78	1732	5.04	3.93	0.78	1838	4.65	3.63	0.78	1908
28	20	5.77	3.81	0.66	1802	5.38	3.55	0.66	1891	4.98	3.29	0.66	1997
28	22	6.10	3.30	0.54	1873	5.71	3.08	0.54	1979	5.32	2.87	0.54	2050
28	24	6.44	2.70	0.42	1944	6.05	2.54	0.42	2032	5.71	2.40	0.42	2120
28	26	6.78	2.03	0.30	2014	6.38	1.92	0.30	2103	5.99	1.80	0.30	2191
29	18	5.49	4.50	0.82	1732	5.04	4.13	0.82	1838	4.65	3.81	0.82	1908
29	20	5.77	4.04	0.70	1802	5.38	3.76	0.70	1891	4.98	3.49	0.70	1997
29	22	6.10	3.54	0.58	1873	5.71	3.31	0.58	1979	5.32	3.09	0.58	2050
29	24	6.44	2.96	0.46	1944	6.05	2.78	0.46	2032	5.71	2.63	0.46	2120
29	26	6.78	2.30	0.34	2014	6.38	2.17	0.34	2103	5.99	2.04	0.34	2191
30	18	5.49	4.72	0.86	1732	5.04	4.33	0.86	1838	4.65	4.00	0.86	1908
30	20	5.77	4.27	0.74	1802	5.38	3.98	0.74	1891	4.98	3.69	0.74	1997
30	22	6.10	3.78	0.62	1873	5.71	3.54	0.62	1979	5.32	3.30	0.62	2050
30	24	6.44	3.22	0.50	1944	6.05	3.02	0.50	2032	5.71	2.86	0.50	2120
30	26	6.78	2.57	0.38	2014	6.38	2.43	0.38	2103	5.99	2.28	0.38	2191
31	18	5.49	4.94	0.90	1732	5.04	4.54	0.90	1838	4.65	4.18	0.90	1908
31	20	5.77	4.50	0.78	1802	5.38	4.19	0.78	1891	4.98	3.89	0.78	1997
31	22	6.10	4.03	0.66	1873	5.71	3.77	0.66	1979	5.32	3.51	0.66	2050
31	24	6.44	3.48	0.54	1944	6.05	3.27	0.54	2032	5.71	3.08	0.54	2120
31	26	6.78	2.85	0.42	2014	6.38	2.68	0.42	2103	5.99	2.52	0.42	2191
32	18	5.49	5.16	0.94	1732	5.04	4.74	0.94	1838	4.65	4.37	0.94	1908
32	20	5.77	4.73	0.82	1802	5.38	4.41	0.82	1891	4.98	4.09	0.82	1997
32	22	6.10	4.27	0.70	1873	5.71	4.00	0.70	1979	5.32	3.72	0.70	2050
32	24	6.44	3.74	0.58	1944	6.05	3.51	0.58	2032	5.71	3.31	0.58	2120
32	26	6.78	3.12	0.46	2014	6.38	2.94	0.46	2103	5.99	2.76	0.46	2191

Note: Q : Total capacity (kW) SHF : Sensible heat factor D.B.: Dry-bulb temperature
SHC : Sensible heat capacity (kW) INPUT : Total power input (W) W.B.: Wet-bulb temperature

HEATING operation

SLZ-M25FA / SUZ-KA25VA6 at Rated frequency

CAPACITY : 3.2(kW) INPUT : 886(W)

	OUTDOOR WB(℃)															
INDOOR	−15		−10		−5		0		5		10		15		20	
DB(℃)	Q	INPUT	Q	INPUT	Q	INPUT	Q	INPUT	Q	INPUT	Q	INPUT	Q	INPUT	Q	INPUT
15	1.60	461	2.02	576	2.43	691	2.85	780	3.26	842	3.68	895	4.06	921	4.48	939
21	1.50	491	1.92	620	2.30	735	2.72	815	3.10	877	3.52	921	3.90	948	4.30	983
26	1.31	532	1.73	665	2.14	780	2.53	859	2.94	921	3.36	966	3.74	992	4.16	1019

SLZ-M35FA / SUZ-KA35VA6 at Rated frequency

CAPACITY: 4.0(kW) INPUT : 1,108(W)

	OUTDOOR WB(℃)															
INDOOR	−15		−10		−5		0		5		10		15		20	
DB(℃)	Q	INPUT	Q	INPUT	Q	INPUT	Q	INPUT	Q	INPUT	Q	INPUT	Q	INPUT	Q	INPUT
15	2.00	576	2.52	720	3.04	864	3.56	975	4.08	1053	4.60	1119	5.08	1152	5.60	1174
21	1.88	614	2.40	776	2.88	920	3.40	1019	3.88	1097	4.40	1152	4.88	1186	5.38	1230
26	1.64	665	2.16	831	2.68	975	3.16	1075	3.68	1152	4.20	1208	4.68	1241	5.20	1274

SLZ-M50FA / SUZ-KA50VA6 at Rated frequency

CAPACITY: 5.0(kW) INPUT : 1,558(W)

	OUTDOOR WB(℃)															
INDOOR	−15		−10		−5		0		5		10		15		20	
DB(℃)	Q	INPUT	Q	INPUT	Q	INPUT	Q	INPUT	Q	INPUT	Q	INPUT	Q	INPUT	Q	INPUT
15	2.50	834	3.15	1013	3.80	1215	4.45	1371	5.10	1480	5.75	1574	6.35	1620	7.00	1651
21	2.35	888	3.00	1091	3.60	1293	4.25	1433	4.85	1542	5.50	1620	6.10	1667	6.73	1729
26	2.05	961	2.70	1169	3.35	1371	3.95	1511	4.60	1620	5.25	1698	5.85	1745	6.50	1792

SLZ-M60FA / SUZ-KA60VA6 at Rated frequency

CAPACITY: 6.4(kW) INPUT : 2,278(W)

	OUTDOOR WB(℃)															
INDOOR	−15		−10		−5		0		5		10		15		20	
DB(℃)	Q	INPUT	Q	INPUT	Q	INPUT	Q	INPUT	Q	INPUT	Q	INPUT	Q	INPUT	Q	INPUT
15	3.20	1219	4.03	1481	4.86	1777	5.70	2005	6.53	2164	7.36	2301	8.13	2369	8.96	2415
21	3.01	1298	3.84	1595	4.61	1891	5.44	2096	6.21	2255	7.04	2369	7.81	2437	8.61	2529
26	2.62	1406	3.46	1709	4.29	2005	5.06	2210	5.89	2369	6.72	2483	7.49	2551	8.32	2620

Note: Q : Total capacity (kW) SHF : Sensible heat factor D.B.: Dry-bulb temperature
SHC : Sensible heat capacity (kW) INPUT : Total power input (W) W.B.: Wet-bulb temperature

B.1.6 4-WAY AIR FLOW SYSTEM

1. FRESH AIR INTAKE (LOCATION FOR INSTALLATION)

At the time of installation, use the duct holes (cut out) located at the positions shown in following diagram, as and when required.

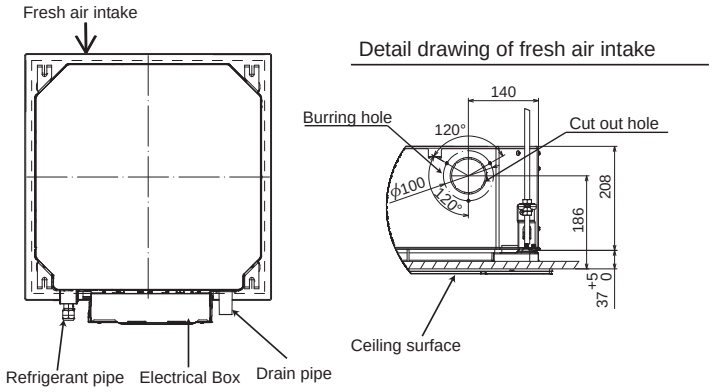

2. FRESH AIR INTAKE AMOUNT & STATIC PRESSURE CHARACTERISTICS SLZ-M15FA SLZ-M25FA SLZ-M35FA SLZ-M50FA SLZ-M60FA

Taking air into the unit

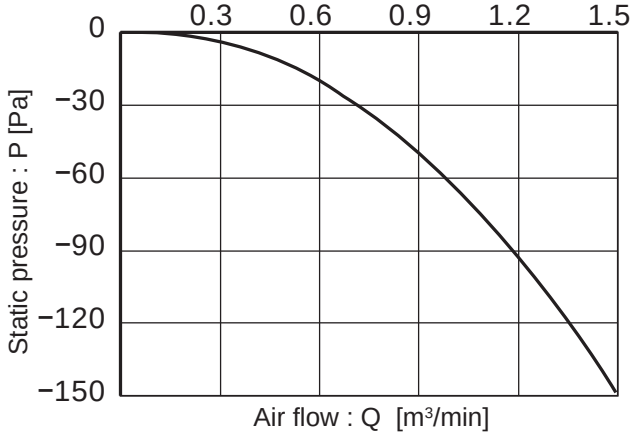

NOTE: Fresh air intake amount should be 10% or less of whole air amount to prevent dew dripping.

How to read curves

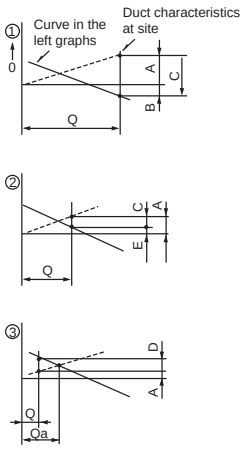

Q…Designed amount of fresh air intake ,<m³/min>
A…Static pressure loss of fresh air intake duct system with airflow amount Q,<Pa>
B…Forced static pressure at air conditioner inlet with airflow amount Q, <Pa>
C…Static pressure of booster fan with airflow amount Q,<Pa>
D…Static pressure loss increase amount of fresh air intake duct system for airflow amount Q,<Pa>
E…Static pressure of indoor unit with airflow amount Q <Pa>
Qa..Estimated amount of fresh air intake without D,<m³/min>

3. OPERATION IN CONJUNCTION WITH DUCT FAN (BOOSTER FAN)

●Whenever the indoor unit operates, the duct fan operates.
(1)Connect the optional multiple remote controller adapter(PAC-SA88HA-E) to the connector CN51 on the indoor controller board.
(2)Drive the relay after connecting the 12V DC relay between the Yellow and Orange connector lines.
Use a relay of 1W or smaller.
MB: Electromagnetic switch power relay for duct fan.
X: Auxiliary relay (12V DC LY-1F)

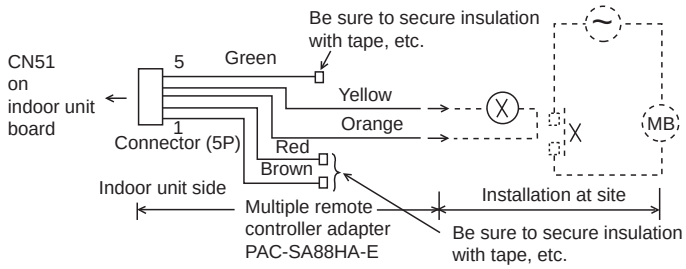

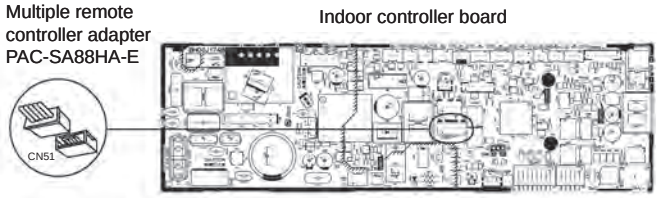

Distance between indoor controller board and relay must be within 10 m.

4. FIXING OF HORIZONTAL VANE

Horizontal vane of each air outlet can be fixed according to the environment where it is installed.

Setting procedure

1) Turn off a main power supply (Turn off a breaker).
2) Remove the vane motor connector in the direction of the arrow shown below with pressing the unlocking button as in the figure below.
   Insulate the disconnected connector with the plastic tape.

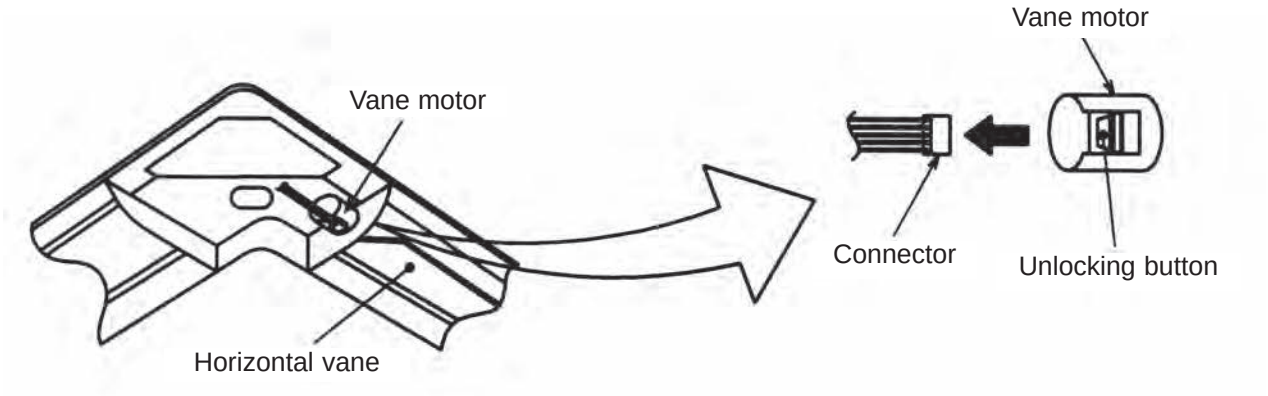

3) Set the vertical vane of the air outlet by hand slowly within the range in the table below.

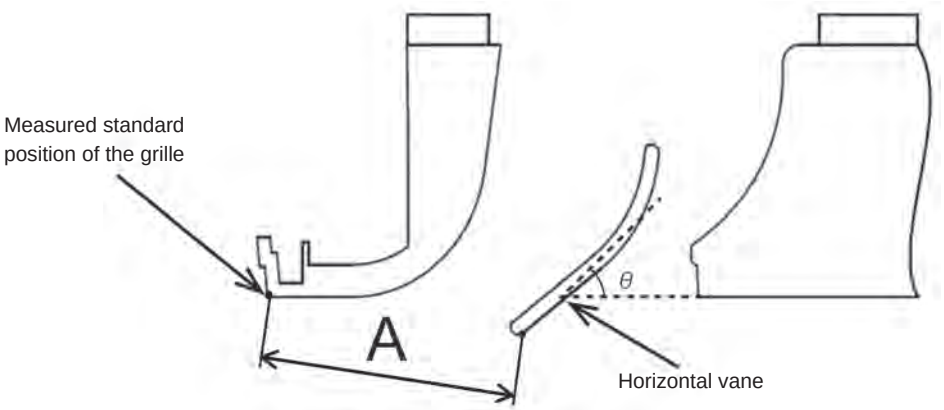

<Set range>

Standard of horizontal position	Angle θ = 21° (Horizontal)	Angle θ = 24°	Angle θ = 39°	Angle θ = 42°	Angle θ = 45° (Downward)
Dimension A (mm)	39	41	47	48	49

Note: Dimension between 39 mm and 49 mm can be arbitrarily set.

Caution ⚠	Do not set the dimension out of the range.
	Erroneous setting could cause dew drips or malfunction of unit.

B.1.7 NOISE CRITERIA CURVES

SLZ-M15FA

<50Hz>

NOTCH	SPL(dB)	LINE
High	28	○—○
Medium	26	△—△
Low	24	□—□

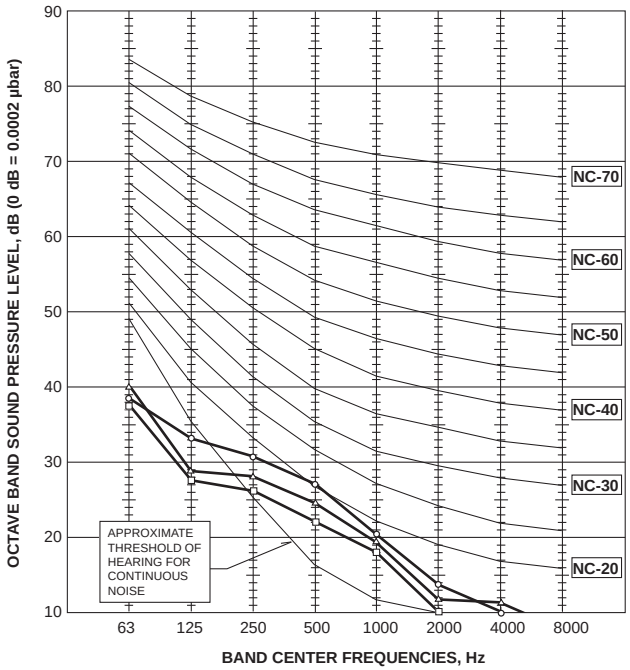

SLZ-M25FA

<50Hz>

NOTCH	SPL(dB)	LINE
High	31	○—○
Medium	28	△—△
Low	25	□—□

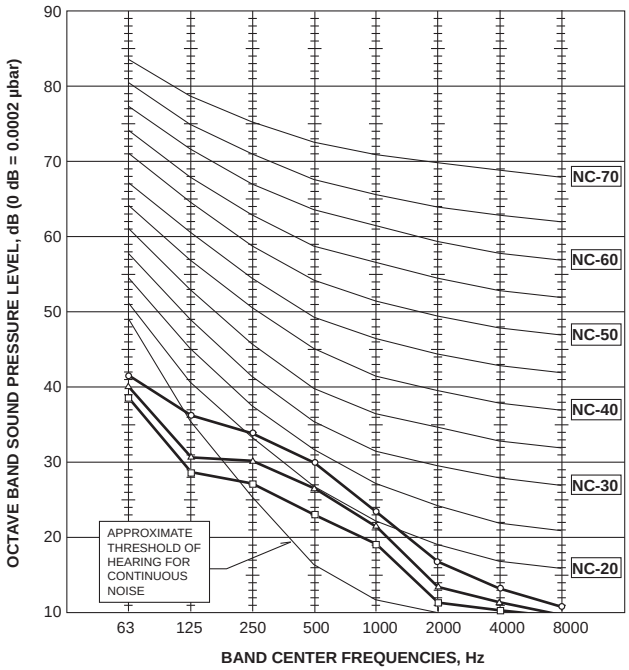

SLZ-M35FA

<50Hz>

NOTCH	SPL(dB)	LINE
High	34	○—○
Medium	30	△—△
Low	25	□—□

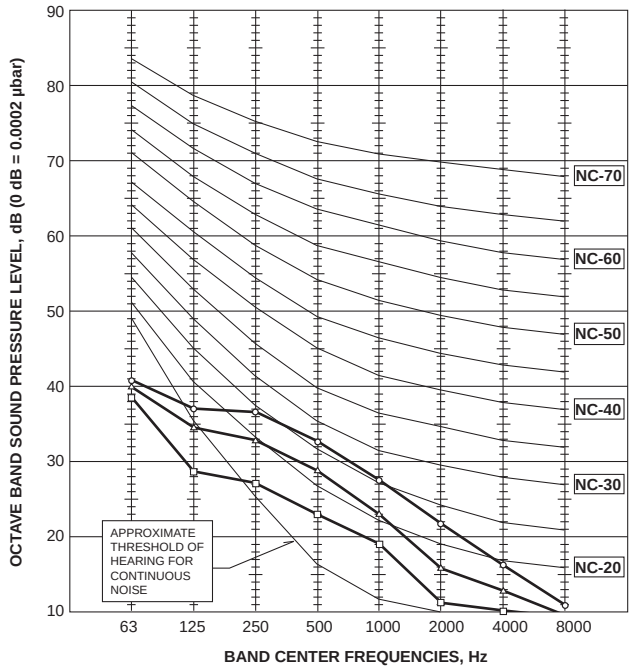

SLZ-M50FA

<50Hz>

NOTCH	SPL(dB)	LINE
High	39	○—○
Medium	34	△—△
Low	27	□—□

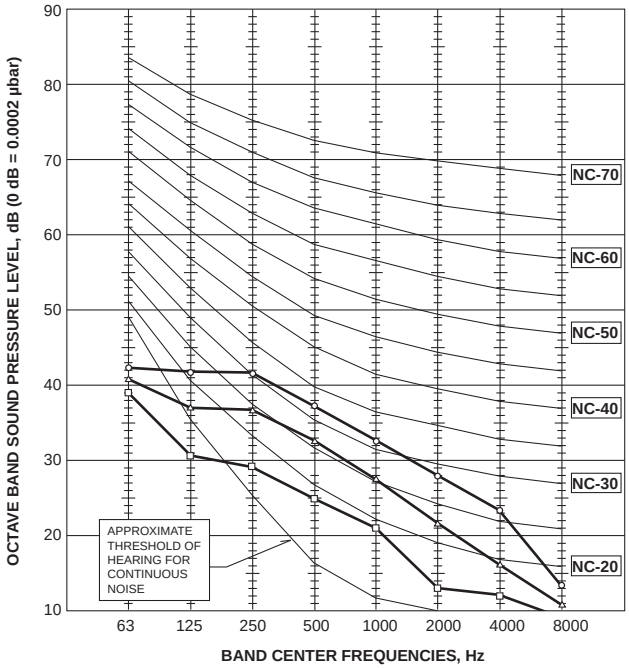

SLZ-M60FA

<50Hz>

NOTCH	SPL(dB)	LINE
High	43	○——○
Medium	40	△——△
Low	32	□——□

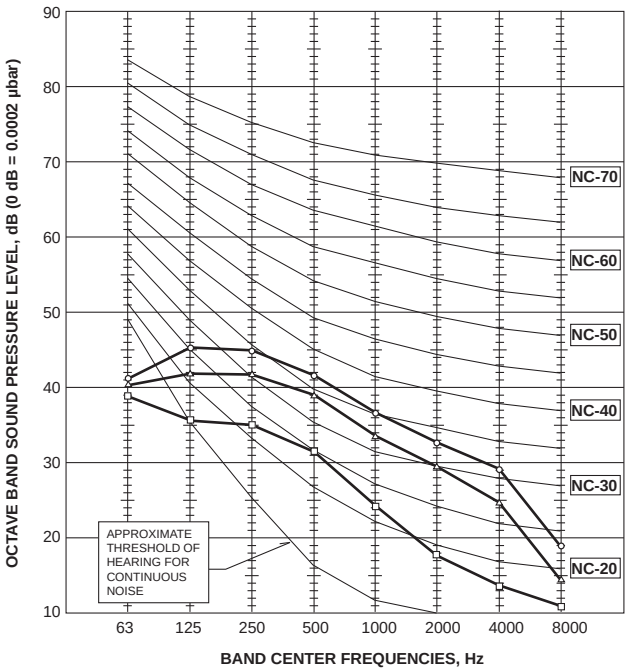

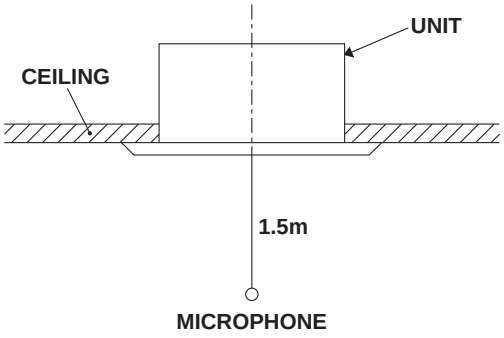

NOTE: The sound level is measured in an anechoic room where echoes are few, when compressor stops. The sound may be bigger than the indicated level in actual use due to surrounding echoes. The sound level can be higher by about 2 dB than the indicated level during cooling and heating operation.

B.1.8 OUTLET AIR SPEED AND COVERAGE RANGE

		SLZ-M15FA	SLZ-M25FA	SLZ-M35FA	SLZ-M50FA	SLZ-M60FA
Air flow	m³/min	7.0	8.5	9.5	11.5	13.0
Air speed	m/sec	1.7	2.1	2.3	2.8	3.2
Coverage range	m	2.7	3.3	3.6	4.2	4.8

The air coverage range is the distance to which the 0.25m/sec air can reach, when air is blown out horizontally from the unit at the High notch position.
The coverage range should be used only as a general guideline since it varies according to the size of the room and the furniture in the room.

B.1.9 CENTER OF GRAVITY POSITION

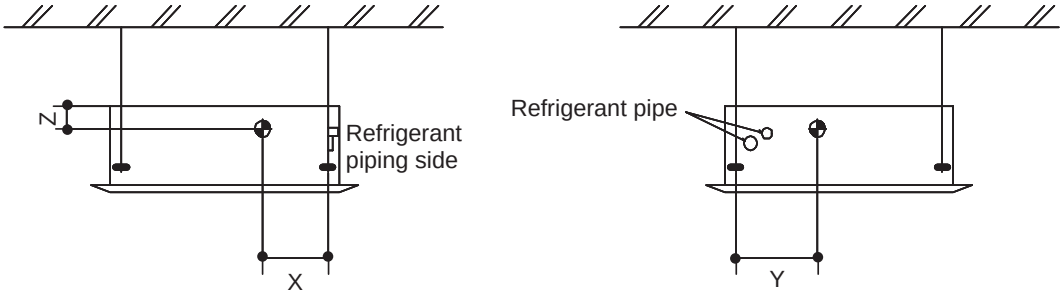

Model	X	Y	Z
SLZ-M15FA	150	260	105
SLZ-M25FA	150	260	105
SLZ-M35FA	150	260	105
SLZ-M50FA	150	260	105
SLZ-M60FA	150	260	105

B.1.10 REMOTE CONTROLLER
B.1.10.1 WIRELESS REMOTE CONTROLLER

[PAR-SL97A-E]

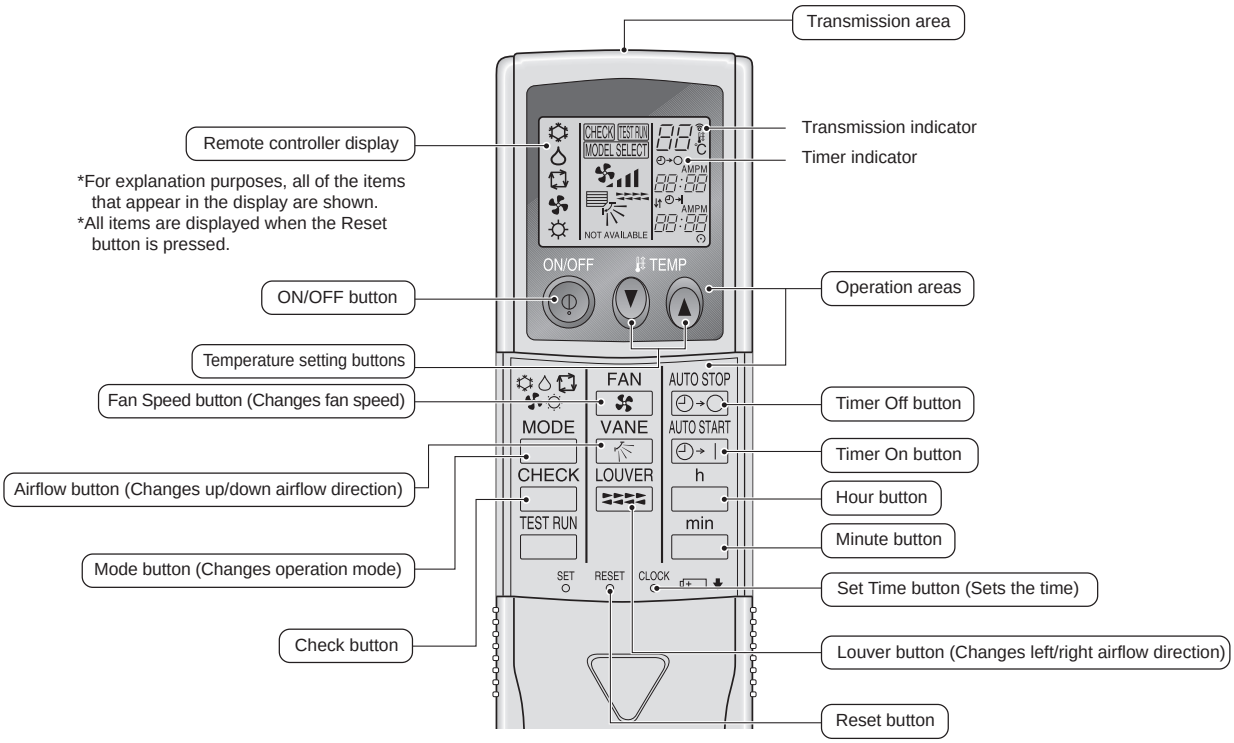

[PAR-SL100A-E]

When cover is open

Controller interface

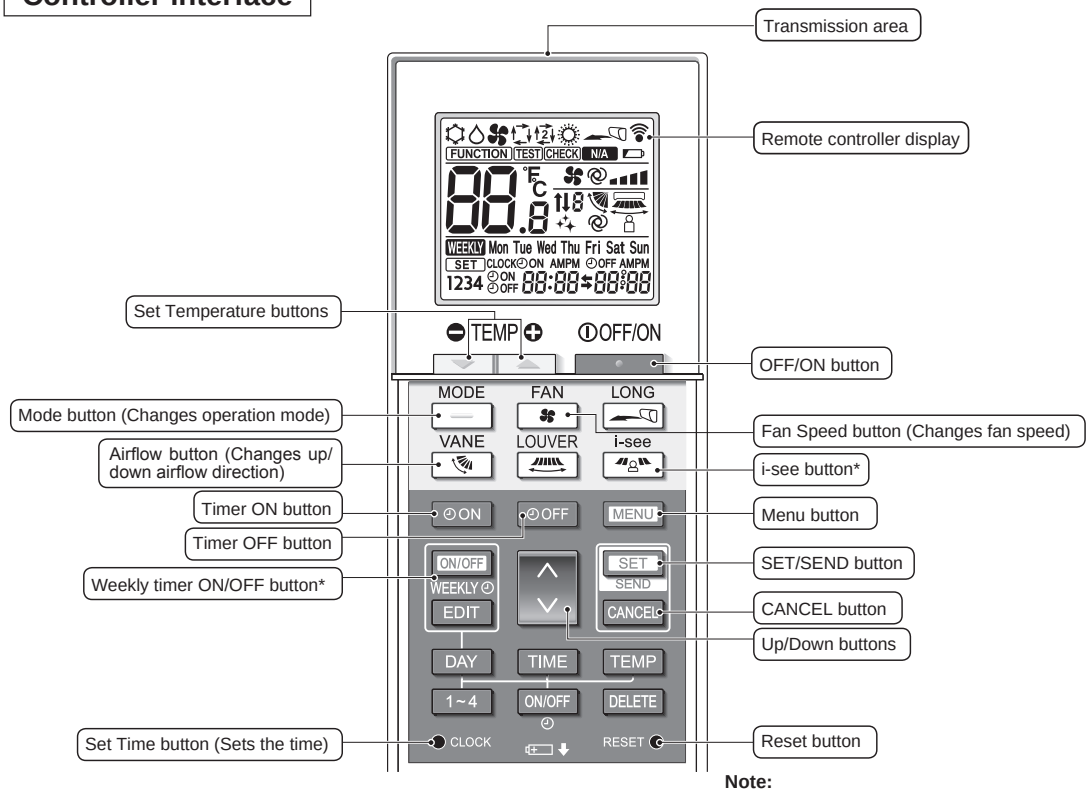

Note:
***,This button is enabled or disabled depending on the model of the indoor unit.**

Display

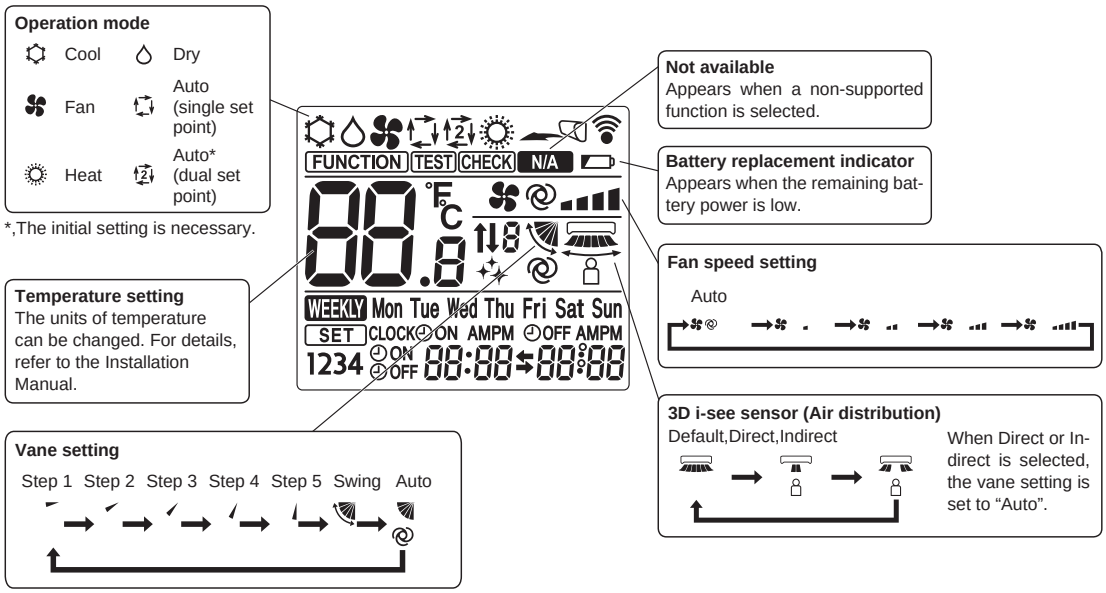

B.1.11 TEMPERATURE AND AIRFLOW DISTRIBUTIONS

TEMPERATURE DISTRIBUTION
SLZ-M·FA
SLZ-M60FA

<Cooling mode>
Horizontal
Ceiling height : 2.7m

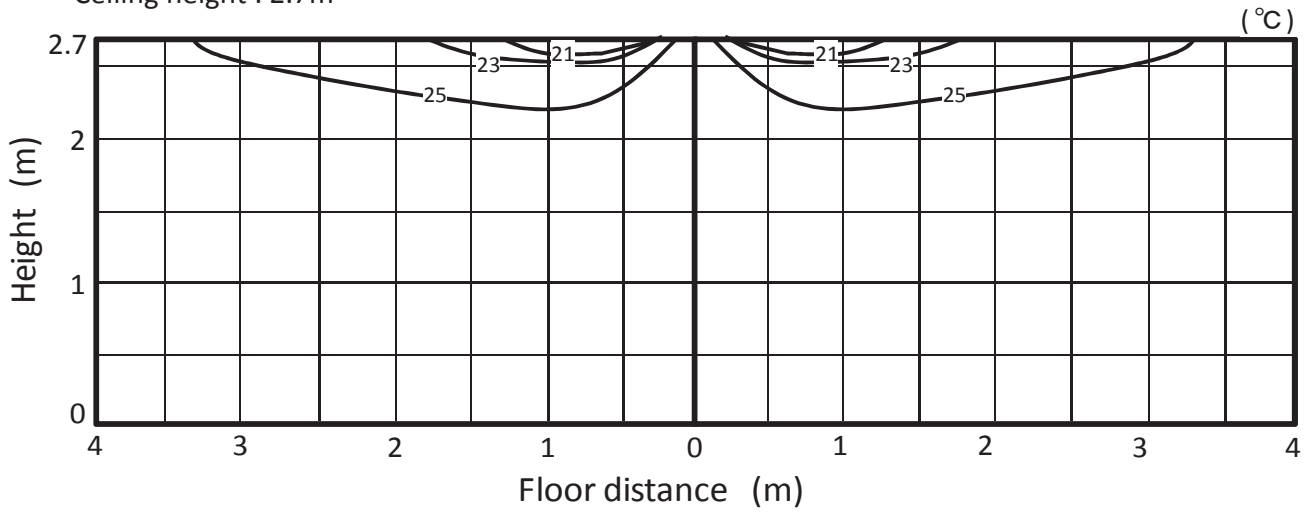

<Heating mode>
Downward
Ceiling height : 2.7m

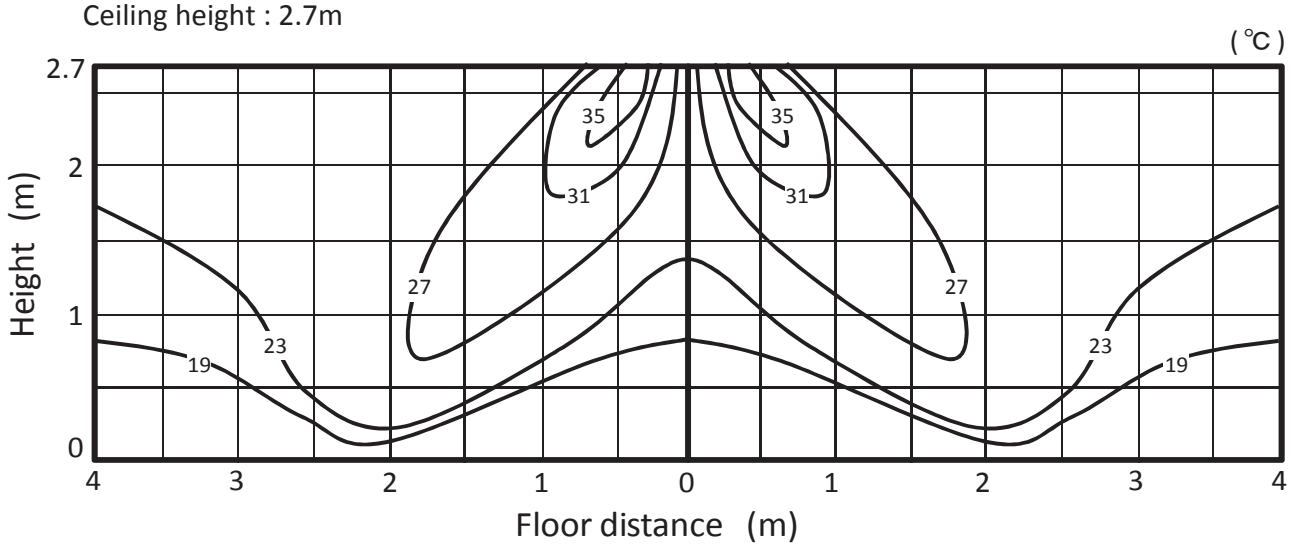

AIR FLOW DISTRIBUTION
SLZ-M·FA
SLZ-M60FA

<Cooling mode>
Horizontal
Ceiling height : 2.7m

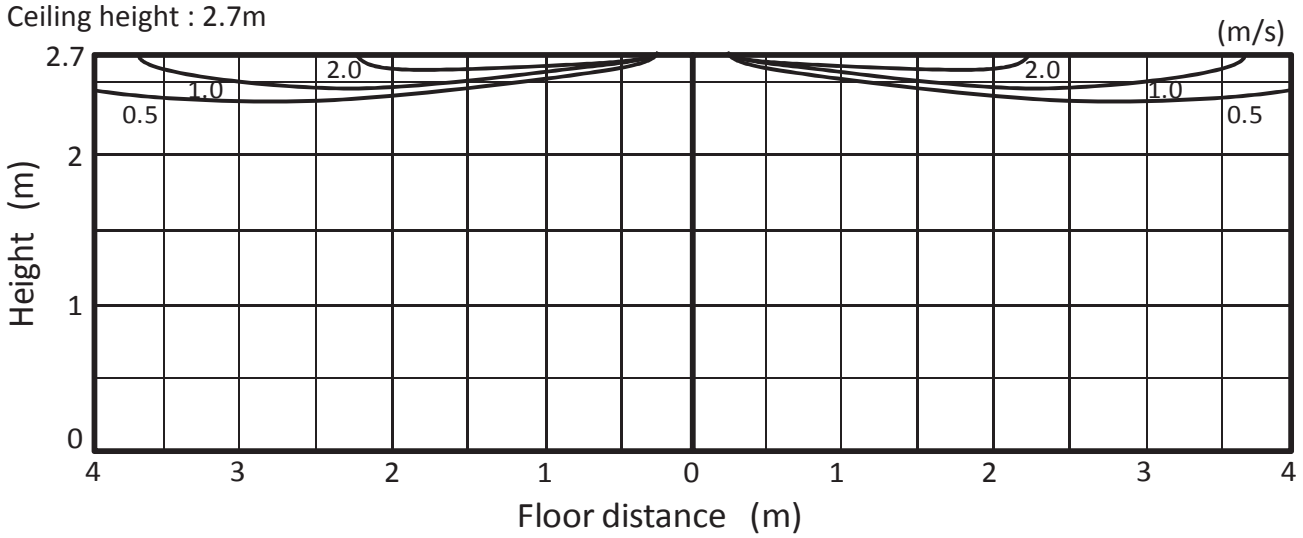

<Heating mode>
Downward
Ceiling height : 2.7m

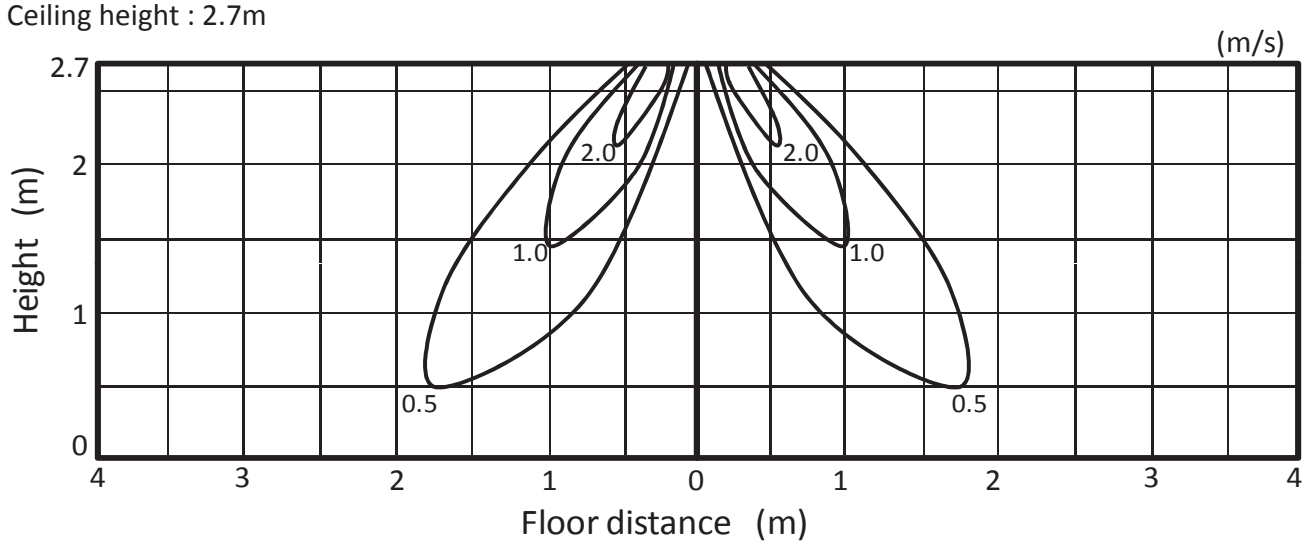

B.2 CEILING-CONCEALED (SEZ)

B.2.1 SPECIFICATIONS B-40
B.2.1.1 R32 type B-40
B.2.1.2 R410A type B-41
B.2.2 OUTLINES AND DIMENSIONS B-42
B.2.2.1 INDOOR UNIT B-42
B.2.2.2 WIRED REMOTE CONTROLLER [PAR-40MAA] B-44
B.2.2.3 WIRELESS REMOTE CONTROLLER B-45
B.2.3 WIRING DIAGRAM B-46
B.2.4 REFRIGERANT SYSTEM DIAGRAM B-47
B.2.5 PERFORMANCE DATA B-48
B.2.5.1 R32 type B-48
B.2.5.2 R410A type B-59
B.2.6 NOISE CRITERIA CURVES B-70
B.2.7 INDOOR FAN PERFORMANCE AND CORRECTED AIR FLOW B-75
B.2.8 CENTER OF GRAVITY POSITION B-79
B.2.9 REMOTE CONTROLLER B-80
B.2.9.1 WIRELESS REMOTE CONTROLLER B-80

B.2.1 SPECIFICATIONS

B.2.1.1 R32 type

Model Name	Indoor Unit				SEZ-M25DA/DAL	SEZ-M35DA/DAL	SEZ-M50DA/DAL	SEZ-M60DA/DAL	SEZ-M71DA/DAL
	Outdoor Unit				SUZ-M25VA	SUZ-M35VA	SUZ-M50VA	SUZ-M60VA	SUZ-M71VA
Power Supply				Source	Outdoor power supply				
	Out			V	230	230	230	230	230
				Phase	Single	Single	Single	Single	Single
				Hz	50	50	50	50	50
	In			V	-	-	-	-	-
				Phase	-	-	-	-	-
				Hz	-	-	-	-	-
Refrigerant					R32	R32	R32	R32	R32
Cooling	Capacity	Rated		kW	2.5	3.5	5.0	6.1	7.1
		Max.		kW	3.2	3.9	5.6	6.3	8.1
		Min.		kW	1.4	0.7	1.1	1.6	2.2
	SHF	Rated			0.78	0.76	0.76	0.79	0.74
	Total Input	Rated		kW	0.710	1.000	1.540	1.840	2.150
	EER				3.50	3.50	3.23	3.30	3.30
	Annual Electricity Consumption			kWh/a	165	207	290	386	452
	SEER				5.3	5.9	6.0	5.5	5.5
		Energy efficiency class			A	A^+	A^+	A	A
Heating	Capacity	Rated		kW	2.9	4.2	6.0	7.4	8.0
		Max.		kW	4.2	5.0	7.2	8.0	10.2
		Min.		kW	1.3	1.1	1.5	1.6	2.0
	Total Input	Rated		kW	0.800	1.070	1.610	2.040	2.280
	COP				3.61	3.90	3.71	3.61	3.50
	Annual Electricity Consumption			kWh/a	807	884	1499	1525	2072
	SCOP				3.8	4.1	4.0	4.2	3.9
		Energy efficiency class			A	A^+	A^+	A^+	A
Operating Current(max)				A	7.2	9.0	14.2	15.5	15.7
Indoor Unit	Input	Rated		kW	0.04	0.05	0.07	0.07	0.1
	Operating Current(max)			A	0.40	0.50	0.70	0.70	0.90
	Dimensions		Height	mm	200	200	200	200	200
			Width	mm	790	990	990	1190	1190
			Depth	mm	700	700	700	700	700
	Weight			kg	18	21	23	27	27
	Air Volume		Low	m³/min.	5.5	7.0	10.0	12.0	12.0
			Mid2	m³/min.	-	-	-	-	-
			Mid	m³/min.	7.0	9.0	12.5	15.0	16.0
			Hi	m³/min.	9.0	11.0	15.0	18.0	20.0
	External Static Pressure			Pa	5-15-35-50	5-15-35-50	5-15-35-50	5-15-35-50	5-15-35-50
	Sound Level (SPL) (External Static Pressure:5Pa)		Low	dB(A)	22	23	29	29	29
			Mid2	dB(A)	-	-	-	-	-
			Mid	dB(A)	25	28	33	33	34
			Hi	dB(A)	29	33	36	37	39
	Sound level (PWL)		Cooling		50	53	57	58	60
Outdoor Unit	Dimensions		Height	mm	550	550	714	880	880
			Width	mm	800	800	800	840	840
			Depth	mm	285	285	285	330	330
	Weight			kg	30	35	41	54	54
	Air Volume	Cooling	Rated	m³/min.	36.3	34.3	45.8	50.1	50.1
		Heating	Rated	m³/min.	34.6	32.7	43.7	50.1	50.1
	Sound Level (SPL)	Cooling	Rated	dB(A)	45	48	48	49	49
			Silent	dB(A)	-	-	-	-	-
		Heating	Rated	dB(A)	46	48	49	51	51
	Sound level (PWL)		Cooling		59	59	64	65	66
	Operating Current(max)			A	6.8	8.5	13.5	14.8	14.8
	Breaker Size			A	10	10	20	20	20
Ext. Piping	Diameter	Liquid		mm	6.35	6.35	6.35	6.35	9.52
		Gas		mm	9.52	9.52	12.7	15.88	15.88
	Max. Length	Out-In		m	20	20	30	30	30
	Max. Height	Out-In	Below Indoor	m	12	12	30	30	30
			Above Indoor	m	12	12	30	30	30
Guranteed Operation Range	Outdoor	Cooling	Upper Limit.	°C	+46	+46	+46	+46	+46
			Lower Limit.	°C	-10	-10	-15	-15	-15
		Heating	Upper Limit.	°C	+24	+24	+24	+24	+24
			Lower Limit.	°C	-10	-10	-10	-10	-10

B.2.1.2 R410A type

Model Name	Indoor Unit				SEZ-M25DA/DAL	SEZ-M35DA/DAL	SEZ-M50DA/DAL	SEZ-M60DA/DAL	SEZ-M71DA/DAL
	Outdoor Unit				SUZ-KA25VA6	SUZ-KA35VA6	SUZ-KA50VA6	SUZ-KA60VA6	SUZ-KA71VA6
Power Supply				Source	Outdoor power supply				
	Out			V	230	230	230	230	230
				Phase	Single	Single	Single	Single	Single
				Hz	50	50	50	50	50
	In			V	-	-	-	-	-
				Phase	-	-	-	-	-
				Hz	-	-	-	-	-
Refrigerant					R410A	R410A	R410A	R410A	R410A
Cooling	Capacity	Rated		kW	2.5	3.5	5.1	5.6	7.1
		Max.		kW	3.2	3.9	5.6	6.3	8.3
		Min.		kW	1.5	1.4	2.3	2.3	2.8
	SHF	Rated			0.80	0.76	0.76	0.79	0.74
	Total Input	Rated		kW	0.730	1.010	1.580	1.740	2.210
	EER				3.42	3.47	3.23	3.22	3.21
	Annual Electricity Consumption			kWh/a	162	210	300	356	458
	SEER				5.3	5.7	5.8	5.3	5.3
		Energy efficiency class			A	A+	A+	A	A
Heating	Capacity	Rated		kW	2.9	4.2	6.4	7.4	8.1
		Max.		kW	4.5	5.0	7.2	8.0	10.4
		Min.		kW	1.3	1.7	1.7	2.5	2.6
	Total Input	Rated		kW	0.803	1.130	1.800	2.200	2.268
	COP				3.61	3.72	3.56	3.36	3.57
	Annual Electricity Consumption			kWh/a	808	979	1653	1878	2202
	SCOP				3.8	4.0	3.9	4.1	3.8
		Energy efficiency class			A	A+	A	A+	A
Operating Current(max)				A	7.4	8.7	12.7	14.7	17.0
Indoor Unit	Input	Rated		kW	0.04	0.05	0.07	0.07	0.1
	Operating Current(max)			A	0.40	0.50	0.70	0.70	0.90
	Dimensions		Height	mm	200	200	200	200	200
			Width	mm	790	990	990	1190	1190
			Depth	mm	700	700	700	700	700
	Weight			kg	18	21	23	27	27
	Air Volume		Low	m³/min.	5.5	7.0	10.0	12.0	12.0
			Mid2	m³/min.	-	-	-	-	-
			Mid	m³/min.	7.0	9.0	12.5	15.0	16.0
			Hi	m³/min.	9.0	11.0	15.0	18.0	20.0
	External Static Pressure			Pa	5-15-35-50	5-15-35-50	5-15-35-50	5-15-35-50	5-15-35-50
	Sound Level (SPL) (External Static Pressure:5Pa)		Low	dB(A)	22	23	29	29	29
			Mid2	dB(A)	-	-	-	-	-
			Mid	dB(A)	25	28	33	33	34
			Hi	dB(A)	29	33	36	37	39
	Sound level (PWL)		Cooling		50	53	57	58	60
Outdoor Unit	Dimensions		Height	mm	550	550	880	880	880
			Width	mm	800	800	840	840	840
			Depth	mm	285	285	330	330	330
	Weight			kg	30	35	54	50	53
	Air Volume	Cooling	Rated	m³/min.	32.6	36.3	44.6	40.9	50.1
		Heating	Rated	m³/min.	34.7	34.8	44.6	49.2	48.2
	Sound Level (SPL)	Cooling	Rated	dB(A)	47	49	52	55	55
			Silent	dB(A)	-	-	-	-	-
		Heating	Rated	dB(A)	48	50	52	55	55
	Sound level (PWL)		Cooling		58	62	65	65	69
	Operating Current(max)			A	7.0	8.2	12.0	14.0	16.1
	Breaker Size			A	10	10	20	20	20
Ext. Piping	Diameter	Liquid		mm	6.35	6.35	6.35	6.35	9.52
		Gas		mm	9.52	9.52	12.7	15.88	15.88
	Max. Length	Out-In		m	20	20	30	30	30
	Max. Height	Out-In	Below Indoor	m	12	12	30	30	30
			Above Indoor	m	12	12	30	30	30
Guranteed Operation Range	Outdoor	Cooling	Upper Limit.	°C	+46	+46	+46	+46	+46
			Lower Limit.	°C	-10	-10	-15	-15	-15
		Heating	Upper Limit.	°C	+24	+24	+24	+24	+24
			Lower Limit.	°C	-10	-10	-10	-10	-10

B.2.2 OUTLINES AND DIMENSIONS
B.2.2.1 INDOOR UNIT

SEZ-M25DA
SEZ-M25DAL
SEZ-M35DA
SEZ-M35DAL
SEZ-M50DA
SEZ-M50DAL
SEZ-M60DA
SEZ-M60DAL
SEZ-M71DA
SEZ-M71DAL

Unit : mm

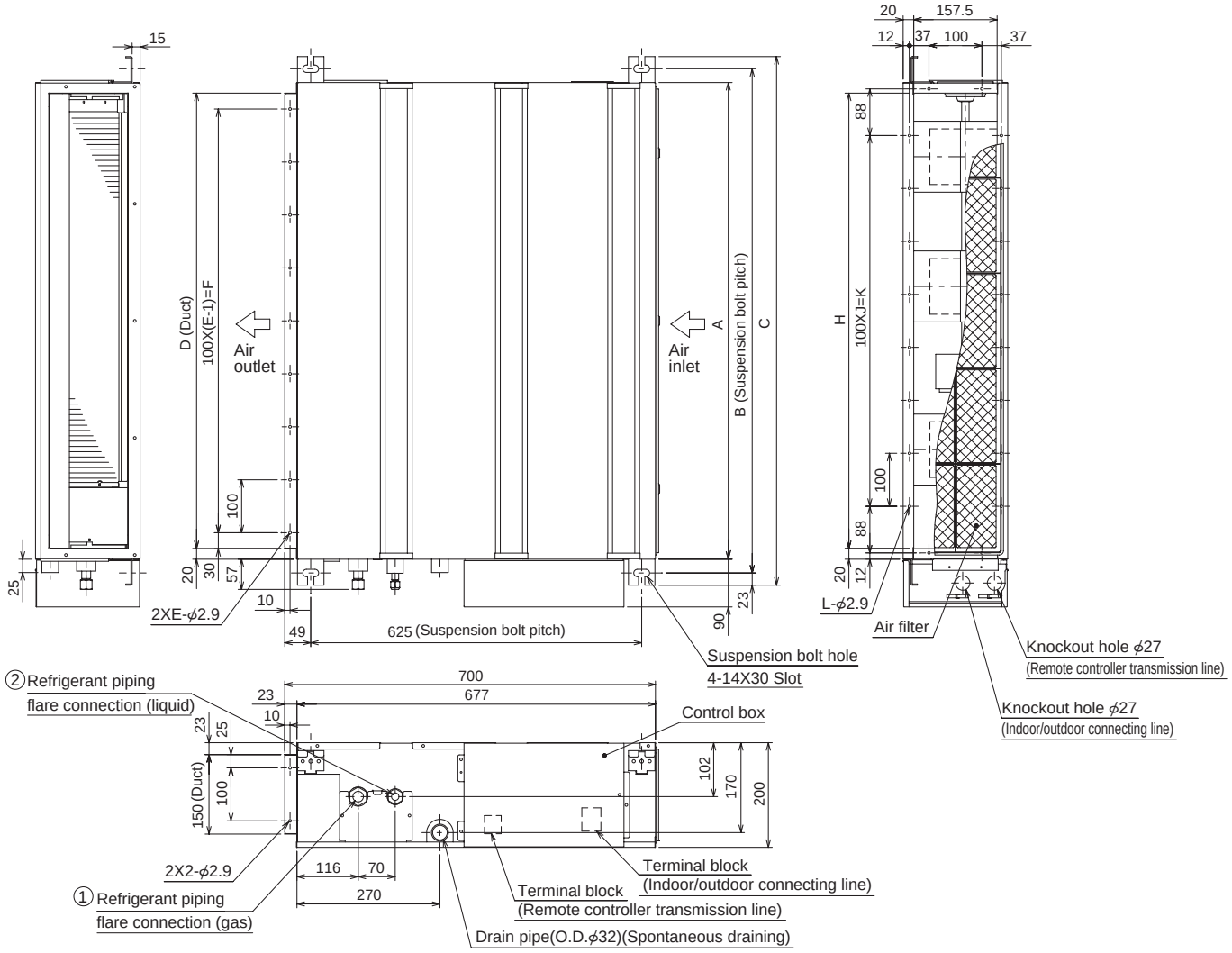

Model	A	B	C	D	E	F	G	H	J	K	L	① Gas pipe	② Liquid pipe
SEZ-M25DA(L)	700	752	798	660	7	600	800	660	5	500	16	φ9.52	φ6.35
SEZ-M35DA(L)	900	952	998	860	9	800	1000	860	7	700	20		
SEZ-M50DA(L)												φ12.7	
SEZ-M60DA(L)	1100	1152	1198	1060	11	1000	1200	1060	9	900	24	φ15.88	
SEZ-M71DA(L)													φ9.52

Note1.Use M10 screw for the suspension bolt (field supply).
2.Keep the service space for the maintenance at the bottom.
3.This chart indicates for SEZ-M50DA(L) model,which has 3 fans.
SEZ-M25,35DA(L) models have 2 fans.
SEZ-M60,71DA(L) models have 4 fans.
4.In case an inlet duct is used,remove the air filter (supply with the unit), then install the filter (field supply) at suction side.

SEZ-M25DA
SEZ-M25DAL
SEZ-M35DA
SEZ-M35DAL
SEZ-M50DA
SEZ-M50DAL
SEZ-M60DA
SEZ-M60DAL
SEZ-M71DA
SEZ-M71DAL

Secure enough access space to allow for the maintenance, inspection, and replacement of the motor, fan, drain pump, heat exchanger, and electric box in one of the following ways.
Select an installation site for the indoor unit so that its maintenance access space will not be obstructed by beams or other objects.

(1) When a space of 300 mm or more is available below the unit between the unit and the ceiling (Fig. 1)
- Create access door 1 and 2 (450 x 450 mm each) as shown in Fig. 2.
  (Access door 2 is not required if enough space is available below the unit for a maintenance worker to work in).

(2) When a space of less than 300 mm is available below the unit between the unit and the ceiling (At least 20 mm of space should be left below the unit as shown in Fig. 3.)
- Create access door 1 diagonally below the electric box and access door 3 below the unit as shown in Fig. 4.
  or
- Create access door 4 below the electric box and the unit as shown in Fig. 5.

Unit : mm

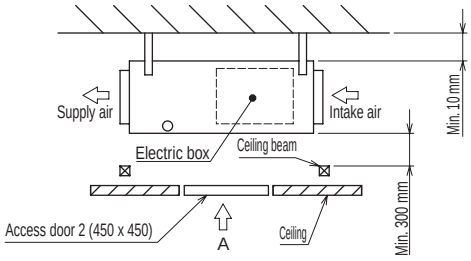

Fig. 1

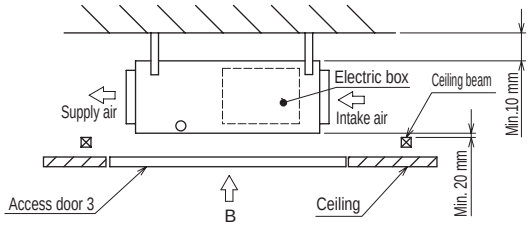

Fig. 3

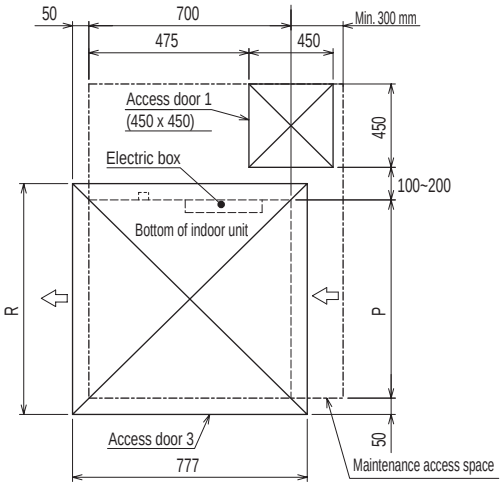

Fig. 4 (Viewed from the direction of the arrow B)

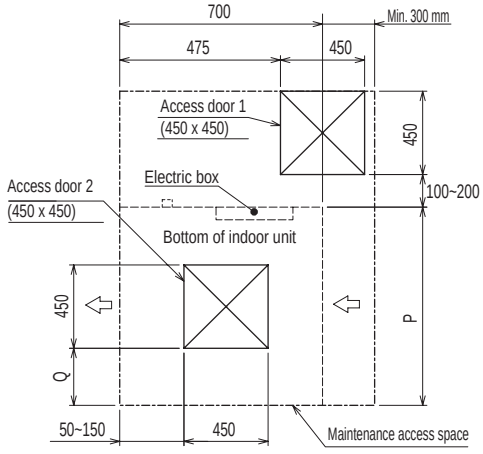

Fig. 2 (Viewed from the direction of the arrow A)

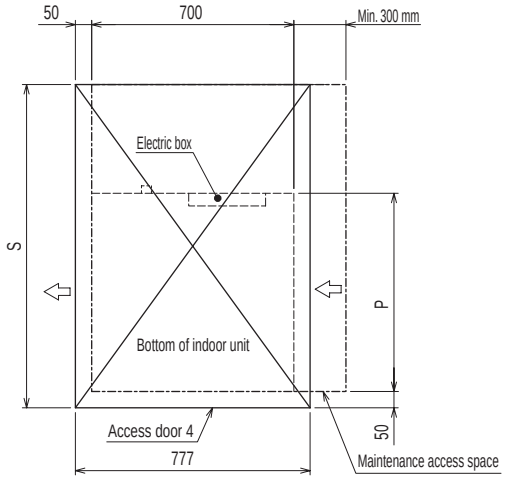

Fig. 5 (Viewed from the direction of the arrow B)

(mm)

Model	P	Q	R	S
SEZ-M25	700	50~150	800	1300
SEZ-M35, 50	900	150~250	1000	1500
SEZ-M60, 71	1100	250~350	1200	1700

B.2.2.2 WIRED REMOTE CONTROLLER (Optional parts)

Unit : mm[in.]

SEZ-M25DA
SEZ-M35DA
SEZ-M50DA
SEZ-M60DA
SEZ-M71DA

[PAR-40MAA]

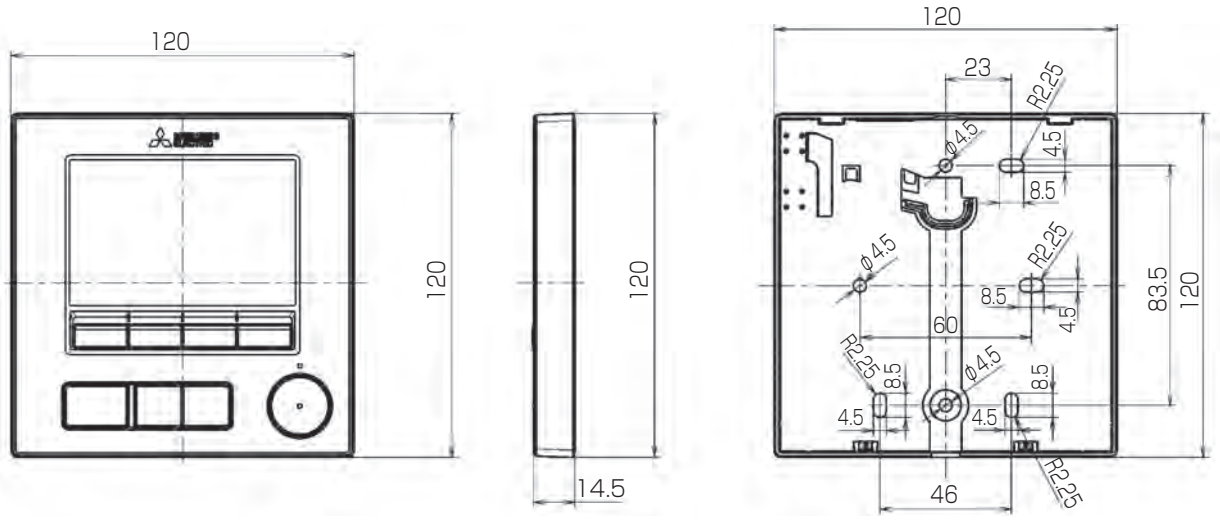

(Front view) (Side view) (Rear view)

B.2.2.3 WIRELESS REMOTE CONTROLLER

Unit : mm

SEZ-M25DAL
SEZ-M35DAL
SEZ-M50DAL
SEZ-M60DAL
SEZ-M71DAL

[PAR-SL97A-E]

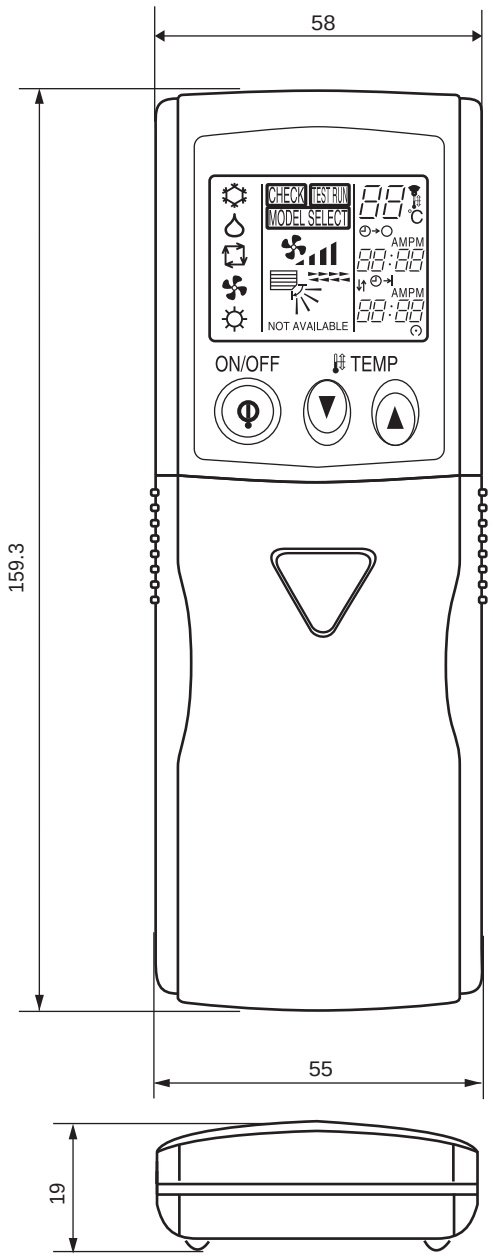

B.2.3 WIRING DIAGRAM

SEZ-M25DA
SEZ-M25DAL
SEZ-M35DA
SEZ-M35DAL
SEZ-M50DA
SEZ-M50DAL
SEZ-M60DA
SEZ-M60DAL
SEZ-M71DA
SEZ-M71DAL

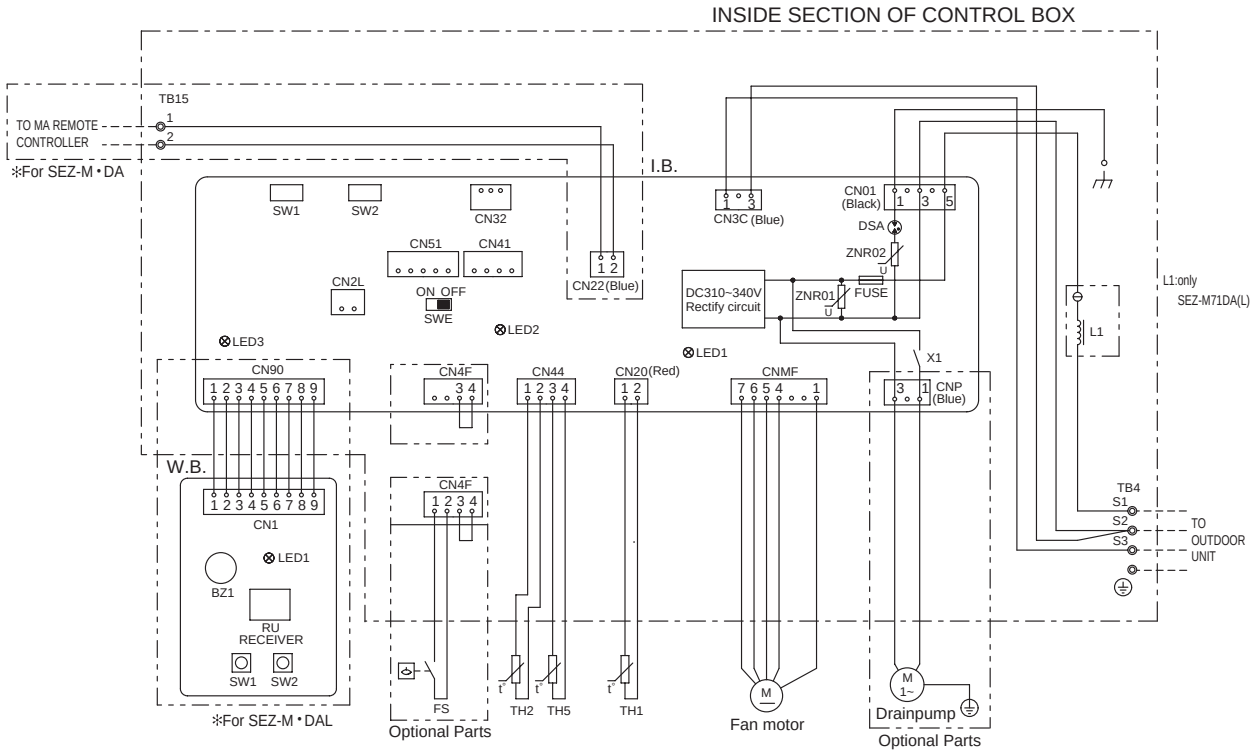

SYMBOL EXPLANATION

SYMBOL	NAME	SYMBOL	NAME
I.B.	INDOOR CONTROLLER BOARD	W.B.	WIRELESS REMOTE CONTROLLER BOARD
FUSE	FUSE AC250V 6.3A	RU	RECEIVING UNIT
ZNR01,02	VARISTOR	BZ1	BUZZER
DSA	ARRESTER	LED1	LED (RUN INDICATOR)
X1	AUX. RELAY	SW1	SWITCH (HEATING ON/OFF)
CN2L	CONNECTOR (LOSSNAY)	SW2	SWITCH (COOLING ON/OFF)
CN32	CONNECTOR (REMOTE SWITCH)	TH1	INTAKE AIR TEMP. THERMISTOR
CN41	CONNECTOR (HA TERMINAL-A)	TH2	PIPE TEMP. THERMISTOR/LIQUID
CN51	CONNECTOR (CENTRALLY CONTROL)	TH5	COND. /EVA. TEMP. THERMISTOR
CN90	CONNECTOR (WIRELESS)	L1	AC REACTOR (POWER FACTOR IMPROVEMENT)
LED1	POWER SUPPLY (I.B.)	FS	FLOAT SWITCH
LED2	POWER SUPPLY (I.B.)	TB4	TERMINAL BLOCK (INDOOR/OUTDOOR CONNECTING LINE)
LED3	TRANSMISSION (INDOOR-OUTDOOR)		
SW1	SWITCH (FOR MODEL SELECTION)	TB15	TERMINAL BLOCK (REMOTE CONTROLLER TRANSMISSION LINE)
SW2	SWITCH (FOR CAPACITY CODE)		
SWE	CONNECTOR (EMERGENCY OPERATION)		

NOTE)1. Since the outdoor side electric wiring may change be sure to check the outdoor unit electric wiring for servicing.
2. Indoor and outdoor connecting wires are made with polarities, make wiring matching terminal numbers(S1,S2,S3).
3. Symbols used in wiring diagram above are,
⊖:Connector, ◎:Terminal Block.

B.2.4 REFRIGERANT SYSTEM DIAGRAM

SEZ-M25DA
SEZ-M25DAL
SEZ-M35DA
SEZ-M35DAL
SEZ-M50DA
SEZ-M50DAL
SEZ-M60DA
SEZ-M60DAL
SEZ-M71DA
SEZ-M71DAL

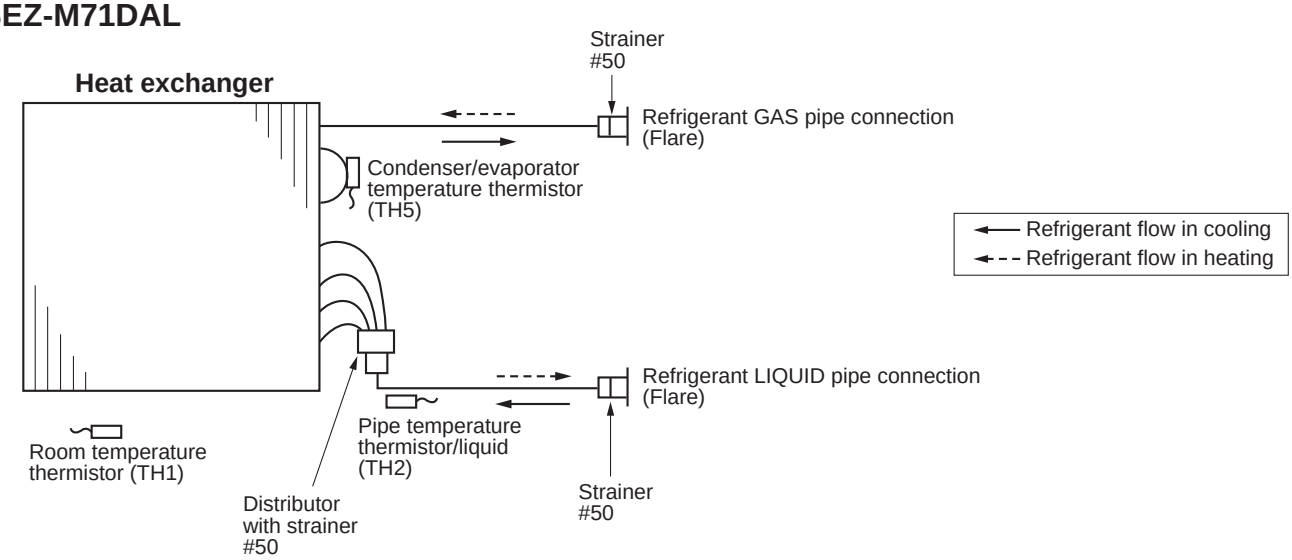

B.2.5 PERFORMANCE DATA

B.2.5.1 R32 type

COOLING operation at Rated frequency

SEZ-M25DA SEZ-M25DAL / SUZ-M25VA

CAPACITY :2.5(kW) INPUT :710 (W) SHF :0.78

Indoor intake air D.B.(℃)	Indoor intake air W.B.(℃)	Outdoor intake air DB: 21				25				27				30			
		Q	SHC	SHF	INPUT	Q	SHC	SHF	INPUT	Q	SHC	SHF	INPUT	Q	SHC	SHF	INPUT
21	18	2.94	1.76	0.60	568	2.81	1.69	0.60	596	2.70	1.62	0.60	625	2.60	1.56	0.60	653
21	20	3.06	1.47	0.48	596	2.94	1.41	0.48	632	2.85	1.37	0.48	646	2.75	1.32	0.48	675
22	18	2.94	1.88	0.64	568	2.81	1.80	0.64	596	2.70	1.73	0.64	625	2.60	1.66	0.64	653
22	20	3.06	1.59	0.52	596	2.94	1.53	0.52	632	2.85	1.48	0.52	646	2.75	1.43	0.52	675
22	22	3.19	1.28	0.40	618	3.08	1.23	0.40	657	3.00	1.20	0.40	675	2.88	1.15	0.40	703
23	18	2.94	2.00	0.68	568	2.81	1.91	0.68	596	2.70	1.84	0.68	625	2.60	1.77	0.68	653
23	20	3.06	1.72	0.56	596	2.94	1.65	0.56	632	2.85	1.60	0.56	646	2.75	1.54	0.56	675
23	22	3.19	1.40	0.44	618	3.08	1.35	0.44	657	3.00	1.32	0.44	675	2.88	1.27	0.44	703
24	18	2.94	2.12	0.72	568	2.81	2.03	0.72	596	2.70	1.94	0.72	625	2.60	1.87	0.72	653
24	20	3.06	1.84	0.60	596	2.94	1.76	0.60	632	2.85	1.71	0.60	646	2.75	1.65	0.60	675
24	22	3.19	1.53	0.48	618	3.08	1.48	0.48	657	3.00	1.44	0.48	675	2.88	1.38	0.48	703
24	24	3.35	1.21	0.36	646	3.23	1.16	0.36	682	3.15	1.13	0.36	703	3.05	1.10	0.36	738
25	20	3.06	1.96	0.64	596	2.94	1.88	0.64	632	2.85	1.82	0.64	646	2.75	1.76	0.64	675
25	22	3.19	1.66	0.52	618	3.08	1.60	0.52	657	3.00	1.56	0.52	675	2.88	1.50	0.52	703
25	24	3.35	1.34	0.40	646	3.23	1.29	0.40	682	3.15	1.26	0.40	703	3.05	1.22	0.40	738
26	18	2.94	2.35	0.80	568	2.81	2.25	0.80	596	2.70	2.16	0.80	625	2.60	2.08	0.80	653
26	20	3.06	2.08	0.68	596	2.94	2.00	0.68	632	2.85	1.94	0.68	646	2.75	1.87	0.68	675
26	22	3.19	1.79	0.56	618	3.08	1.72	0.56	657	3.00	1.68	0.56	675	2.88	1.61	0.56	703
26	24	3.35	1.47	0.44	646	3.23	1.42	0.44	682	3.15	1.39	0.44	703	3.05	1.34	0.44	738
26	26	3.45	1.10	0.32	682	3.35	1.07	0.32	717	3.30	1.06	0.32	738	3.20	1.02	0.32	760
27	18	2.94	2.47	0.84	568	2.81	2.36	0.84	596	2.70	2.27	0.84	625	2.60	2.18	0.84	653
27	20	3.06	2.21	0.72	596	2.94	2.12	0.72	632	2.85	2.05	0.72	646	2.75	1.98	0.72	675
27	22	3.19	1.91	0.60	618	3.08	1.85	0.60	657	3.00	1.80	0.60	675	2.88	1.73	0.60	703
27	24	3.35	1.61	0.48	646	3.23	1.55	0.48	682	3.15	1.51	0.48	703	3.05	1.46	0.48	738
27	26	3.45	1.24	0.36	682	3.35	1.21	0.36	717	3.30	1.19	0.36	738	3.20	1.15	0.36	760
28	18	2.94	2.59	0.88	568	2.81	2.48	0.88	596	2.70	2.38	0.88	625	2.60	2.29	0.88	653
28	20	3.06	2.33	0.76	596	2.94	2.23	0.76	632	2.85	2.17	0.76	646	2.75	2.09	0.76	675
28	22	3.19	2.04	0.64	618	3.08	1.97	0.64	657	3.00	1.92	0.64	675	2.88	1.84	0.64	703
28	24	3.35	1.74	0.52	646	3.23	1.68	0.52	682	3.15	1.64	0.52	703	3.05	1.59	0.52	738
28	26	3.45	1.38	0.40	682	3.35	1.34	0.40	717	3.30	1.32	0.40	738	3.20	1.28	0.40	760
29	18	2.94	2.70	0.92	568	2.81	2.59	0.92	596	2.70	2.48	0.92	625	2.60	2.39	0.92	653
29	20	3.06	2.45	0.80	596	2.94	2.35	0.80	632	2.85	2.28	0.80	646	2.75	2.20	0.80	675
29	22	3.19	2.17	0.68	618	3.08	2.09	0.68	657	3.00	2.04	0.68	675	2.88	1.96	0.68	703
29	24	3.35	1.88	0.56	646	3.23	1.81	0.56	682	3.15	1.76	0.56	703	3.05	1.71	0.56	738
29	26	3.45	1.52	0.44	682	3.35	1.47	0.44	717	3.30	1.45	0.44	738	3.20	1.41	0.44	760
30	18	2.94	2.82	0.96	568	2.81	2.70	0.96	596	2.70	2.59	0.96	625	2.60	2.50	0.96	653
30	20	3.06	2.57	0.84	596	2.94	2.47	0.84	632	2.85	2.39	0.84	646	2.75	2.31	0.84	675
30	22	3.19	2.30	0.72	618	3.08	2.21	0.72	657	3.00	2.16	0.72	675	2.88	2.07	0.72	703
30	24	3.35	2.01	0.60	646	3.23	1.94	0.60	682	3.15	1.89	0.60	703	3.05	1.83	0.60	738
30	26	3.45	1.66	0.48	682	3.35	1.61	0.48	717	3.30	1.58	0.48	738	3.20	1.54	0.48	760
31	18	2.94	2.94	1.00	568	2.81	2.81	1.00	596	2.70	2.70	1.00	625	2.60	2.60	1.00	653
31	20	3.06	2.70	0.88	596	2.94	2.59	0.88	632	2.85	2.51	0.88	646	2.75	2.42	0.88	675
31	22	3.19	2.42	0.76	618	3.08	2.34	0.76	657	3.00	2.28	0.76	675	2.88	2.19	0.76	703
31	24	3.35	2.14	0.64	646	3.23	2.06	0.64	682	3.15	2.02	0.64	703	3.05	1.95	0.64	738
31	26	3.45	1.79	0.52	682	3.35	1.74	0.52	717	3.30	1.72	0.52	738	3.20	1.66	0.52	760
32	18	2.94	3.06	1.04	568	2.81	2.93	1.04	596	2.70	2.81	1.04	625	2.60	2.70	1.04	653
32	20	3.06	2.82	0.92	596	2.94	2.70	0.92	632	2.85	2.62	0.92	646	2.75	2.53	0.92	675
32	22	3.19	2.55	0.80	618	3.08	2.46	0.80	657	3.00	2.40	0.80	675	2.88	2.30	0.80	703
32	24	3.35	2.28	0.68	646	3.23	2.19	0.68	682	3.15	2.14	0.68	703	3.05	2.07	0.68	738
32	26	3.45	1.93	0.56	682	3.35	1.88	0.56	717	3.30	1.85	0.56	738	3.20	1.79	0.56	760

Note: Q : Total capacity (kW) SHF : Sensible heat factor D.B.: Dry-bulb temperature
SHC : Sensible heat capacity (kW) INPUT : Total power input (W) W.B.: Wet-bulb temperature

COOLING operation at Rated frequency
SEZ-M25DA SEZ-M25DAL / SUZ-M25VA

CAPACITY :2.5(kW) INPUT :710 (W) SHF :0.78

Indoor intake air D.B.(℃)	Indoor intake air W.B.(℃)	Outdoor intake air DB: 35				40				46			
		Q	SHC	SHF	INPUT	Q	SHC	SHF	INPUT	Q	SHC	SHF	INPUT
21	18	2.45	1.47	0.60	696	2.25	1.35	0.60	738	2.08	1.25	0.60	767
21	20	2.58	1.24	0.48	724	2.40	1.15	0.48	760	2.23	1.07	0.48	802
22	18	2.45	1.57	0.64	696	2.25	1.44	0.64	738	2.08	1.33	0.64	767
22	20	2.58	1.34	0.52	724	2.40	1.25	0.52	760	2.23	1.16	0.52	802
22	22	2.73	1.09	0.40	753	2.55	1.02	0.40	795	2.38	0.95	0.40	824
23	18	2.45	1.67	0.68	696	2.25	1.53	0.68	738	2.08	1.41	0.68	767
23	20	2.58	1.44	0.56	724	2.40	1.34	0.56	760	2.23	1.25	0.56	802
23	22	2.73	1.20	0.44	753	2.55	1.12	0.44	795	2.38	1.05	0.44	824
24	18	2.45	1.76	0.72	696	2.25	1.62	0.72	738	2.08	1.49	0.72	767
24	20	2.58	1.55	0.60	724	2.40	1.44	0.60	760	2.23	1.34	0.60	802
24	22	2.73	1.31	0.48	753	2.55	1.22	0.48	795	2.38	1.14	0.48	824
24	24	2.88	1.04	0.36	781	2.70	0.97	0.36	817	2.55	0.92	0.36	852
25	20	2.58	1.65	0.64	724	2.40	1.54	0.64	760	2.23	1.42	0.64	802
25	22	2.73	1.42	0.52	753	2.55	1.33	0.52	795	2.38	1.24	0.52	824
25	24	2.88	1.15	0.40	781	2.70	1.08	0.40	817	2.55	1.02	0.40	852
26	18	2.45	1.96	0.80	696	2.25	1.80	0.80	738	2.08	1.66	0.80	767
26	20	2.58	1.75	0.68	724	2.40	1.63	0.68	760	2.23	1.51	0.68	802
26	22	2.73	1.53	0.56	753	2.55	1.43	0.56	795	2.38	1.33	0.56	824
26	24	2.88	1.27	0.44	781	2.70	1.19	0.44	817	2.55	1.12	0.44	852
26	26	3.03	0.97	0.32	809	2.85	0.91	0.32	845	2.68	0.86	0.32	880
27	18	2.45	2.06	0.84	696	2.25	1.89	0.84	738	2.08	1.74	0.84	767
27	20	2.58	1.85	0.72	724	2.40	1.73	0.72	760	2.23	1.60	0.72	802
27	22	2.73	1.64	0.60	753	2.55	1.53	0.60	795	2.38	1.43	0.60	824
27	24	2.88	1.38	0.48	781	2.70	1.30	0.48	817	2.55	1.22	0.48	852
27	26	3.03	1.09	0.36	809	2.85	1.03	0.36	845	2.68	0.96	0.36	880
28	18	2.45	2.16	0.88	696	2.25	1.98	0.88	738	2.08	1.83	0.88	767
28	20	2.58	1.96	0.76	724	2.40	1.82	0.76	760	2.23	1.69	0.76	802
28	22	2.73	1.74	0.64	753	2.55	1.63	0.64	795	2.38	1.52	0.64	824
28	24	2.88	1.50	0.52	781	2.70	1.40	0.52	817	2.55	1.33	0.52	852
28	26	3.03	1.21	0.40	809	2.85	1.14	0.40	845	2.68	1.07	0.40	880
29	18	2.45	2.25	0.92	696	2.25	2.07	0.92	738	2.08	1.91	0.92	767
29	20	2.58	2.06	0.80	724	2.40	1.92	0.80	760	2.23	1.78	0.80	802
29	22	2.73	1.85	0.68	753	2.55	1.73	0.68	795	2.38	1.62	0.68	824
29	24	2.88	1.61	0.56	781	2.70	1.51	0.56	817	2.55	1.43	0.56	852
29	26	3.03	1.33	0.44	809	2.85	1.25	0.44	845	2.68	1.18	0.44	880
30	18	2.45	2.35	0.96	696	2.25	2.16	0.96	738	2.08	1.99	0.96	767
30	20	2.58	2.16	0.84	724	2.40	2.02	0.84	760	2.23	1.87	0.84	802
30	22	2.73	1.96	0.72	753	2.55	1.84	0.72	795	2.38	1.71	0.72	824
30	24	2.88	1.73	0.60	781	2.70	1.62	0.60	817	2.55	1.53	0.60	852
30	26	3.03	1.45	0.48	809	2.85	1.37	0.48	845	2.68	1.28	0.48	880
31	18	2.45	2.45	1.00	696	2.25	2.25	1.00	738	2.08	2.08	1.00	767
31	20	2.58	2.27	0.88	724	2.40	2.11	0.88	760	2.23	1.96	0.88	802
31	22	2.73	2.07	0.76	753	2.55	1.94	0.76	795	2.38	1.81	0.76	824
31	24	2.88	1.84	0.64	781	2.70	1.73	0.64	817	2.55	1.63	0.64	852
31	26	3.03	1.57	0.52	809	2.85	1.48	0.52	845	2.68	1.39	0.52	880
32	18	2.45	2.55	1.04	696	2.25	2.34	1.04	738	2.08	2.16	1.04	767
32	20	2.58	2.37	0.92	724	2.40	2.21	0.92	760	2.23	2.05	0.92	802
32	22	2.73	2.18	0.80	753	2.55	2.04	0.80	795	2.38	1.90	0.80	824
32	24	2.88	1.96	0.68	781	2.70	1.84	0.68	817	2.55	1.73	0.68	852
32	26	3.03	1.69	0.56	809	2.85	1.60	0.56	845	2.68	1.50	0.56	880

Note: Q : Total capacity (kW) SHF : Sensible heat factor D.B.: Dry-bulb temperature
SHC : Sensible heat capacity (kW) INPUT : Total power input (W) W.B.: Wet-bulb temperature

COOLING operation at Rated frequency
SEZ-M35DA SEZ-M35DAL / SUZ-M35VA

CAPACITY :3.5(kW) INPUT :1000(W) SHF :0.76

Indoor intake air D.B.(℃)	Indoor intake air W.B.(℃)	Outdoor intake air DB: 21				25				27				30			
		Q	SHC	SHF	INPUT	Q	SHC	SHF	INPUT	Q	SHC	SHF	INPUT	Q	SHC	SHF	INPUT
21	18	4.11	2.39	0.58	800	3.94	2.28	0.58	840	3.78	2.19	0.58	880	3.64	2.11	0.58	920
21	20	4.29	1.97	0.46	840	4.11	1.89	0.46	890	3.99	1.84	0.46	910	3.85	1.77	0.46	950
22	18	4.11	2.55	0.62	800	3.94	2.44	0.62	840	3.78	2.34	0.62	880	3.64	2.26	0.62	920
22	20	4.29	2.14	0.50	840	4.11	2.06	0.50	890	3.99	2.00	0.50	910	3.85	1.93	0.50	950
22	22	4.46	1.70	0.38	870	4.31	1.64	0.38	925	4.20	1.60	0.38	950	4.03	1.53	0.38	990
23	18	4.11	2.71	0.66	800	3.94	2.60	0.66	840	3.78	2.49	0.66	880	3.64	2.40	0.66	920
23	20	4.29	2.32	0.54	840	4.11	2.22	0.54	890	3.99	2.15	0.54	910	3.85	2.08	0.54	950
23	22	4.46	1.87	0.42	870	4.31	1.81	0.42	925	4.20	1.76	0.42	950	4.03	1.69	0.42	990
24	18	4.11	2.88	0.70	800	3.94	2.76	0.70	840	3.78	2.65	0.70	880	3.64	2.55	0.70	920
24	20	4.29	2.49	0.58	840	4.11	2.39	0.58	890	3.99	2.31	0.58	910	3.85	2.23	0.58	950
24	22	4.46	2.05	0.46	870	4.31	1.98	0.46	925	4.20	1.93	0.46	950	4.03	1.85	0.46	990
24	24	4.69	1.59	0.34	910	4.52	1.54	0.34	960	4.41	1.50	0.34	990	4.27	1.45	0.34	1,040
25	20	4.29	2.66	0.62	840	4.11	2.55	0.62	890	3.99	2.47	0.62	910	3.85	2.39	0.62	950
25	22	4.46	2.23	0.50	870	4.31	2.15	0.50	925	4.20	2.10	0.50	950	4.03	2.01	0.50	990
25	24	4.69	1.78	0.38	910	4.52	1.72	0.38	960	4.41	1.68	0.38	990	4.27	1.62	0.38	1,040
26	18	4.11	3.21	0.78	800	3.94	3.07	0.78	840	3.78	2.95	0.78	880	3.64	2.84	0.78	920
26	20	4.29	2.83	0.66	840	4.11	2.71	0.66	890	3.99	2.63	0.66	910	3.85	2.54	0.66	950
26	22	4.46	2.41	0.54	870	4.31	2.32	0.54	925	4.20	2.27	0.54	950	4.03	2.17	0.54	990
26	24	4.69	1.97	0.42	910	4.52	1.90	0.42	960	4.41	1.85	0.42	990	4.27	1.79	0.42	1,040
26	26	4.83	1.45	0.30	960	4.69	1.41	0.30	1,010	4.62	1.39	0.30	1,040	4.48	1.34	0.30	1,070
27	18	4.11	3.37	0.82	800	3.94	3.23	0.82	840	3.78	3.10	0.82	880	3.64	2.98	0.82	920
27	20	4.29	3.00	0.70	840	4.11	2.88	0.70	890	3.99	2.79	0.70	910	3.85	2.70	0.70	950
27	22	4.46	2.59	0.58	870	4.31	2.50	0.58	925	4.20	2.44	0.58	950	4.03	2.33	0.58	990
27	24	4.69	2.16	0.46	910	4.52	2.08	0.46	960	4.41	2.03	0.46	990	4.27	1.96	0.46	1,040
27	26	4.83	1.64	0.34	960	4.69	1.59	0.34	1,010	4.62	1.57	0.34	1,040	4.48	1.52	0.34	1,070
28	18	4.11	3.54	0.86	800	3.94	3.39	0.86	840	3.78	3.25	0.86	880	3.64	3.13	0.86	920
28	20	4.29	3.17	0.74	840	4.11	3.04	0.74	890	3.99	2.95	0.74	910	3.85	2.85	0.74	950
28	22	4.46	2.77	0.62	870	4.31	2.67	0.62	925	4.20	2.60	0.62	950	4.03	2.50	0.62	990
28	24	4.69	2.35	0.50	910	4.52	2.26	0.50	960	4.41	2.21	0.50	990	4.27	2.14	0.50	1,040
28	26	4.83	1.84	0.38	960	4.69	1.78	0.38	1,010	4.62	1.76	0.38	1,040	4.48	1.70	0.38	1,070
29	18	4.11	3.70	0.90	800	3.94	3.54	0.90	840	3.78	3.40	0.90	880	3.64	3.28	0.90	920
29	20	4.29	3.34	0.78	840	4.11	3.21	0.78	890	3.99	3.11	0.78	910	3.85	3.00	0.78	950
29	22	4.46	2.95	0.66	870	4.31	2.84	0.66	925	4.20	2.77	0.66	950	4.03	2.66	0.66	990
29	24	4.69	2.53	0.54	910	4.52	2.44	0.54	960	4.41	2.38	0.54	990	4.27	2.31	0.54	1,040
29	26	4.83	2.03	0.42	960	4.69	1.97	0.42	1,010	4.62	1.94	0.42	1,040	4.48	1.88	0.42	1,070
30	18	4.11	3.87	0.94	800	3.94	3.70	0.94	840	3.78	3.55	0.94	880	3.64	3.42	0.94	920
30	20	4.29	3.52	0.82	840	4.11	3.37	0.82	890	3.99	3.27	0.82	910	3.85	3.16	0.82	950
30	22	4.46	3.12	0.70	870	4.31	3.01	0.70	925	4.20	2.94	0.70	950	4.03	2.82	0.70	990
30	24	4.69	2.72	0.58	910	4.52	2.62	0.58	960	4.41	2.56	0.58	990	4.27	2.48	0.58	1,040
30	26	4.83	2.22	0.46	960	4.69	2.16	0.46	1,010	4.62	2.13	0.46	1,040	4.48	2.06	0.46	1,070
31	18	4.11	4.03	0.98	800	3.94	3.86	0.98	840	3.78	3.70	0.98	880	3.64	3.57	0.98	920
31	20	4.29	3.69	0.86	840	4.11	3.54	0.86	890	3.99	3.43	0.86	910	3.85	3.31	0.86	950
31	22	4.46	3.30	0.74	870	4.31	3.19	0.74	925	4.20	3.11	0.74	950	4.03	2.98	0.74	990
31	24	4.69	2.91	0.62	910	4.52	2.80	0.62	960	4.41	2.73	0.62	990	4.27	2.65	0.62	1,040
31	26	4.83	2.42	0.50	960	4.69	2.35	0.50	1,010	4.62	2.31	0.50	1,040	4.48	2.24	0.50	1,070
32	18	4.11	4.19	1.02	800	3.94	4.02	1.02	840	3.78	3.86	1.02	880	3.64	3.71	1.02	920
32	20	4.29	3.86	0.90	840	4.11	3.70	0.90	890	3.99	3.59	0.90	910	3.85	3.47	0.90	950
32	22	4.46	3.48	0.78	870	4.31	3.36	0.78	925	4.20	3.28	0.78	950	4.03	3.14	0.78	990
32	24	4.69	3.10	0.66	910	4.52	2.98	0.66	960	4.41	2.91	0.66	990	4.27	2.82	0.66	1,040
32	26	4.83	2.61	0.54	960	4.69	2.53	0.54	1,010	4.62	2.49	0.54	1,040	4.48	2.42	0.54	1,070

Note: Q : Total capacity (kW) SHF : Sensible heat factor D.B.: Dry-bulb temperature
SHC : Sensible heat capacity (kW) INPUT : Total power input (W) W.B.: Wet-bulb temperature

COOLING operation at Rated frequency
SEZ-M35DA SEZ-M35DAL / SUZ-M35VA

CAPACITY :3.5(kW) INPUT :1000(W) SHF :0.76

Indoor intake air D.B.(℃)	Indoor intake air W.B.(℃)	Outdoor intake air DB: 35				40				46			
		Q	SHC	SHF	INPUT	Q	SHC	SHF	INPUT	Q	SHC	SHF	INPUT
21	18	3.43	1.99	0.58	980	3.15	1.83	0.58	1,040	2.91	1.68	0.58	1,080
21	20	3.61	1.66	0.46	1,020	3.36	1.55	0.46	1,070	3.12	1.43	0.46	1,130
22	18	3.43	2.13	0.62	980	3.15	1.95	0.62	1,040	2.91	1.80	0.62	1,080
22	20	3.61	1.80	0.50	1,020	3.36	1.68	0.50	1,070	3.12	1.56	0.50	1,130
22	22	3.82	1.45	0.38	1,060	3.57	1.36	0.38	1,120	3.33	1.26	0.38	1,160
23	18	3.43	2.26	0.66	980	3.15	2.08	0.66	1,040	2.91	1.92	0.66	1,080
23	20	3.61	1.95	0.54	1,020	3.36	1.81	0.54	1,070	3.12	1.68	0.54	1,130
23	22	3.82	1.60	0.42	1,060	3.57	1.50	0.42	1,120	3.33	1.40	0.42	1,160
24	18	3.43	2.40	0.70	980	3.15	2.21	0.70	1,040	2.91	2.03	0.70	1,080
24	20	3.61	2.09	0.58	1,020	3.36	1.95	0.58	1,070	3.12	1.81	0.58	1,130
24	22	3.82	1.75	0.46	1,060	3.57	1.64	0.46	1,120	3.33	1.53	0.46	1,160
24	24	4.03	1.37	0.34	1,100	3.78	1.29	0.34	1,150	3.57	1.21	0.34	1,200
25	20	3.61	2.24	0.62	1,020	3.36	2.08	0.62	1,070	3.12	1.93	0.62	1,130
25	22	3.82	1.91	0.50	1,060	3.57	1.79	0.50	1,120	3.33	1.66	0.50	1,160
25	24	4.03	1.53	0.38	1,100	3.78	1.44	0.38	1,150	3.57	1.36	0.38	1,200
26	18	3.43	2.68	0.78	980	3.15	2.46	0.78	1,040	2.91	2.27	0.78	1,080
26	20	3.61	2.38	0.66	1,020	3.36	2.22	0.66	1,070	3.12	2.06	0.66	1,130
26	22	3.82	2.06	0.54	1,060	3.57	1.93	0.54	1,120	3.33	1.80	0.54	1,160
26	24	4.03	1.69	0.42	1,100	3.78	1.59	0.42	1,150	3.57	1.50	0.42	1,200
26	26	4.24	1.27	0.30	1,140	3.99	1.20	0.30	1,190	3.75	1.12	0.30	1,240
27	18	3.43	2.81	0.82	980	3.15	2.58	0.82	1,040	2.91	2.38	0.82	1,080
27	20	3.61	2.52	0.70	1,020	3.36	2.35	0.70	1,070	3.12	2.18	0.70	1,130
27	22	3.82	2.21	0.58	1,060	3.57	2.07	0.58	1,120	3.33	1.93	0.58	1,160
27	24	4.03	1.85	0.46	1,100	3.78	1.74	0.46	1,150	3.57	1.64	0.46	1,200
27	26	4.24	1.44	0.34	1,140	3.99	1.36	0.34	1,190	3.75	1.27	0.34	1,240
28	18	3.43	2.95	0.86	980	3.15	2.71	0.86	1,040	2.91	2.50	0.86	1,080
28	20	3.61	2.67	0.74	1,020	3.36	2.49	0.74	1,070	3.12	2.31	0.74	1,130
28	22	3.82	2.37	0.62	1,060	3.57	2.21	0.62	1,120	3.33	2.06	0.62	1,160
28	24	4.03	2.01	0.50	1,100	3.78	1.89	0.50	1,150	3.57	1.79	0.50	1,200
28	26	4.24	1.61	0.38	1,140	3.99	1.52	0.38	1,190	3.75	1.42	0.38	1,240
29	18	3.43	3.09	0.90	980	3.15	2.84	0.90	1,040	2.91	2.61	0.90	1,080
29	20	3.61	2.81	0.78	1,020	3.36	2.62	0.78	1,070	3.12	2.43	0.78	1,130
29	22	3.82	2.52	0.66	1,060	3.57	2.36	0.66	1,120	3.33	2.19	0.66	1,160
29	24	4.03	2.17	0.54	1,100	3.78	2.04	0.54	1,150	3.57	1.93	0.54	1,200
29	26	4.24	1.78	0.42	1,140	3.99	1.68	0.42	1,190	3.75	1.57	0.42	1,240
30	18	3.43	3.22	0.94	980	3.15	2.96	0.94	1,040	2.91	2.73	0.94	1,080
30	20	3.61	2.96	0.82	1,020	3.36	2.76	0.82	1,070	3.12	2.55	0.82	1,130
30	22	3.82	2.67	0.70	1,060	3.57	2.50	0.70	1,120	3.33	2.33	0.70	1,160
30	24	4.03	2.33	0.58	1,100	3.78	2.19	0.58	1,150	3.57	2.07	0.58	1,200
30	26	4.24	1.95	0.46	1,140	3.99	1.84	0.46	1,190	3.75	1.72	0.46	1,240
31	18	3.43	3.36	0.98	980	3.15	3.09	0.98	1,040	2.91	2.85	0.98	1,080
31	20	3.61	3.10	0.86	1,020	3.36	2.89	0.86	1,070	3.12	2.68	0.86	1,130
31	22	3.82	2.82	0.74	1,060	3.57	2.64	0.74	1,120	3.33	2.46	0.74	1,160
31	24	4.03	2.50	0.62	1,100	3.78	2.34	0.62	1,150	3.57	2.21	0.62	1,200
31	26	4.24	2.12	0.50	1,140	3.99	2.00	0.50	1,190	3.75	1.87	0.50	1,240
32	18	3.43	3.50	1.02	980	3.15	3.21	1.02	1,040	2.91	2.96	1.02	1,080
32	20	3.61	3.24	0.90	1,020	3.36	3.02	0.90	1,070	3.12	2.80	0.90	1,130
32	22	3.82	2.98	0.78	1,060	3.57	2.78	0.78	1,120	3.33	2.59	0.78	1,160
32	24	4.03	2.66	0.66	1,100	3.78	2.49	0.66	1,150	3.57	2.36	0.66	1,200
32	26	4.24	2.29	0.54	1,140	3.99	2.15	0.54	1,190	3.75	2.02	0.54	1,240

Note: Q : Total capacity (kW) SHF : Sensible heat factor D.B.: Dry-bulb temperature
SHC : Sensible heat capacity (kW) INPUT : Total power input (W) W.B.: Wet-bulb temperature

COOLING operation at Rated frequency
SEZ-M50DA SEZ-M50DAL / SUZ-M50VA

CAPACITY :5.0(kW) INPUT :1540(W) SHF :0.76

Indoor intake air D.B.(℃)	Indoor intake air W.B.(℃)	Outdoor intake air DB: 21				25				27				30			
		Q	SHC	SHF	INPUT	Q	SHC	SHF	INPUT	Q	SHC	SHF	INPUT	Q	SHC	SHF	INPUT
21	18	5.88	3.41	0.58	1,232	5.63	3.26	0.58	1,294	5.40	3.13	0.58	1,355	5.20	3.02	0.58	1,417
21	20	6.13	2.82	0.46	1,294	5.88	2.70	0.46	1,371	5.70	2.62	0.46	1,401	5.50	2.53	0.46	1,463
22	18	5.88	3.64	0.62	1,232	5.63	3.49	0.62	1,294	5.40	3.35	0.62	1,355	5.20	3.22	0.62	1,417
22	20	6.13	3.06	0.50	1,294	5.88	2.94	0.50	1,371	5.70	2.85	0.50	1,401	5.50	2.75	0.50	1,463
22	22	6.38	2.42	0.38	1,340	6.15	2.34	0.38	1,425	6.00	2.28	0.38	1,463	5.75	2.19	0.38	1,525
23	18	5.88	3.88	0.66	1,232	5.63	3.71	0.66	1,294	5.40	3.56	0.66	1,355	5.20	3.43	0.66	1,417
23	20	6.13	3.31	0.54	1,294	5.88	3.17	0.54	1,371	5.70	3.08	0.54	1,401	5.50	2.97	0.54	1,463
23	22	6.38	2.68	0.42	1,340	6.15	2.58	0.42	1,425	6.00	2.52	0.42	1,463	5.75	2.42	0.42	1,525
24	18	5.88	4.11	0.70	1,232	5.63	3.94	0.70	1,294	5.40	3.78	0.70	1,355	5.20	3.64	0.70	1,417
24	20	6.13	3.55	0.58	1,294	5.88	3.41	0.58	1,371	5.70	3.31	0.58	1,401	5.50	3.19	0.58	1,463
24	22	6.38	2.93	0.46	1,340	6.15	2.83	0.46	1,425	6.00	2.76	0.46	1,463	5.75	2.65	0.46	1,525
24	24	6.70	2.28	0.34	1,401	6.45	2.19	0.34	1,478	6.30	2.14	0.34	1,525	6.10	2.07	0.34	1,602
25	20	6.13	3.80	0.62	1,294	5.88	3.64	0.62	1,371	5.70	3.53	0.62	1,401	5.50	3.41	0.62	1,463
25	22	6.38	3.19	0.50	1,340	6.15	3.08	0.50	1,425	6.00	3.00	0.50	1,463	5.75	2.88	0.50	1,525
25	24	6.70	2.55	0.38	1,401	6.45	2.45	0.38	1,478	6.30	2.39	0.38	1,525	6.10	2.32	0.38	1,602
26	18	5.88	4.58	0.78	1,232	5.63	4.39	0.78	1,294	5.40	4.21	0.78	1,355	5.20	4.06	0.78	1,417
26	20	6.13	4.04	0.66	1,294	5.88	3.88	0.66	1,371	5.70	3.76	0.66	1,401	5.50	3.63	0.66	1,463
26	22	6.38	3.44	0.54	1,340	6.15	3.32	0.54	1,425	6.00	3.24	0.54	1,463	5.75	3.11	0.54	1,525
26	24	6.70	2.81	0.42	1,401	6.45	2.71	0.42	1,478	6.30	2.65	0.42	1,525	6.10	2.56	0.42	1,602
26	26	6.90	2.07	0.30	1,478	6.70	2.01	0.30	1,555	6.60	1.98	0.30	1,602	6.40	1.92	0.30	1,648
27	18	5.88	4.82	0.82	1,232	5.63	4.61	0.82	1,294	5.40	4.43	0.82	1,355	5.20	4.26	0.82	1,417
27	20	6.13	4.29	0.70	1,294	5.88	4.11	0.70	1,371	5.70	3.99	0.70	1,401	5.50	3.85	0.70	1,463
27	22	6.38	3.70	0.58	1,340	6.15	3.57	0.58	1,425	6.00	3.48	0.58	1,463	5.75	3.34	0.58	1,525
27	24	6.70	3.08	0.46	1,401	6.45	2.97	0.46	1,478	6.30	2.90	0.46	1,525	6.10	2.81	0.46	1,602
27	26	6.90	2.35	0.34	1,478	6.70	2.28	0.34	1,555	6.60	2.24	0.34	1,602	6.40	2.18	0.34	1,648
28	18	5.88	5.05	0.86	1,232	5.63	4.84	0.86	1,294	5.40	4.64	0.86	1,355	5.20	4.47	0.86	1,417
28	20	6.13	4.53	0.74	1,294	5.88	4.35	0.74	1,371	5.70	4.22	0.74	1,401	5.50	4.07	0.74	1,463
28	22	6.38	3.95	0.62	1,340	6.15	3.81	0.62	1,425	6.00	3.72	0.62	1,463	5.75	3.57	0.62	1,525
28	24	6.70	3.35	0.50	1,401	6.45	3.23	0.50	1,478	6.30	3.15	0.50	1,525	6.10	3.05	0.50	1,602
28	26	6.90	2.62	0.38	1,478	6.70	2.55	0.38	1,555	6.60	2.51	0.38	1,602	6.40	2.43	0.38	1,648
29	18	5.88	5.29	0.90	1,232	5.63	5.06	0.90	1,294	5.40	4.86	0.90	1,355	5.20	4.68	0.90	1,417
29	20	6.13	4.78	0.78	1,294	5.88	4.58	0.78	1,371	5.70	4.45	0.78	1,401	5.50	4.29	0.78	1,463
29	22	6.38	4.21	0.66	1,340	6.15	4.06	0.66	1,425	6.00	3.96	0.66	1,463	5.75	3.80	0.66	1,525
29	24	6.70	3.62	0.54	1,401	6.45	3.48	0.54	1,478	6.30	3.40	0.54	1,525	6.10	3.29	0.54	1,602
29	26	6.90	2.90	0.42	1,478	6.70	2.81	0.42	1,555	6.60	2.77	0.42	1,602	6.40	2.69	0.42	1,648
30	18	5.88	5.52	0.94	1,232	5.63	5.29	0.94	1,294	5.40	5.08	0.94	1,355	5.20	4.89	0.94	1,417
30	20	6.13	5.02	0.82	1,294	5.88	4.82	0.82	1,371	5.70	4.67	0.82	1,401	5.50	4.51	0.82	1,463
30	22	6.38	4.46	0.70	1,340	6.15	4.31	0.70	1,425	6.00	4.20	0.70	1,463	5.75	4.03	0.70	1,525
30	24	6.70	3.89	0.58	1,401	6.45	3.74	0.58	1,478	6.30	3.65	0.58	1,525	6.10	3.54	0.58	1,602
30	26	6.90	3.17	0.46	1,478	6.70	3.08	0.46	1,555	6.60	3.04	0.46	1,602	6.40	2.94	0.46	1,648
31	18	5.88	5.76	0.98	1,232	5.63	5.51	0.98	1,294	5.40	5.29	0.98	1,355	5.20	5.10	0.98	1,417
31	20	6.13	5.27	0.86	1,294	5.88	5.05	0.86	1,371	5.70	4.90	0.86	1,401	5.50	4.73	0.86	1,463
31	22	6.38	4.72	0.74	1,340	6.15	4.55	0.74	1,425	6.00	4.44	0.74	1,463	5.75	4.26	0.74	1,525
31	24	6.70	4.15	0.62	1,401	6.45	4.00	0.62	1,478	6.30	3.91	0.62	1,525	6.10	3.78	0.62	1,602
31	26	6.90	3.45	0.50	1,478	6.70	3.35	0.50	1,555	6.60	3.30	0.50	1,602	6.40	3.20	0.50	1,648
32	18	5.88	5.99	1.02	1,232	5.63	5.74	1.02	1,294	5.40	5.51	1.02	1,355	5.20	5.30	1.02	1,417
32	20	6.13	5.51	0.90	1,294	5.88	5.29	0.90	1,371	5.70	5.13	0.90	1,401	5.50	4.95	0.90	1,463
32	22	6.38	4.97	0.78	1,340	6.15	4.80	0.78	1,425	6.00	4.68	0.78	1,463	5.75	4.49	0.78	1,525
32	24	6.70	4.42	0.66	1,401	6.45	4.26	0.66	1,478	6.30	4.16	0.66	1,525	6.10	4.03	0.66	1,602
32	26	6.90	3.73	0.54	1,478	6.70	3.62	0.54	1,555	6.60	3.56	0.54	1,602	6.40	3.46	0.54	1,648

Note: Q : Total capacity (kW) SHF : Sensible heat factor D.B.: Dry-bulb temperature
SHC : Sensible heat capacity (kW) INPUT : Total power input (W) W.B.: Wet-bulb temperature

COOLING operation at Rated frequency
SEZ-M50DA SEZ-M50DAL / SUZ-M50VA

CAPACITY :5.0(kW) INPUT :1540(W) SHF :0.76

Indoor intake air D.B.(℃)	Indoor intake air W.B.(℃)	Outdoor intake air DB: 35				40				46			
		Q	SHC	SHF	INPUT	Q	SHC	SHF	INPUT	Q	SHC	SHF	INPUT
21	18	4.90	2.84	0.58	1,509	4.50	2.61	0.58	1,602	4.15	2.41	0.58	1,663
21	20	5.15	2.37	0.46	1,571	4.80	2.21	0.46	1,648	4.45	2.05	0.46	1,740
22	18	4.90	3.04	0.62	1,509	4.50	2.79	0.62	1,602	4.15	2.57	0.62	1,663
22	20	5.15	2.58	0.50	1,571	4.80	2.40	0.50	1,648	4.45	2.23	0.50	1,740
22	22	5.45	2.07	0.38	1,632	5.10	1.94	0.38	1,725	4.75	1.81	0.38	1,786
23	18	4.90	3.23	0.66	1,509	4.50	2.97	0.66	1,602	4.15	2.74	0.66	1,663
23	20	5.15	2.78	0.54	1,571	4.80	2.59	0.54	1,648	4.45	2.40	0.54	1,740
23	22	5.45	2.29	0.42	1,632	5.10	2.14	0.42	1,725	4.75	2.00	0.42	1,786
24	18	4.90	3.43	0.70	1,509	4.50	3.15	0.70	1,602	4.15	2.91	0.70	1,663
24	20	5.15	2.99	0.58	1,571	4.80	2.78	0.58	1,648	4.45	2.58	0.58	1,740
24	22	5.45	2.51	0.46	1,632	5.10	2.35	0.46	1,725	4.75	2.19	0.46	1,786
24	24	5.75	1.96	0.34	1,694	5.40	1.84	0.34	1,771	5.10	1.73	0.34	1,848
25	20	5.15	3.19	0.62	1,571	4.80	2.98	0.62	1,648	4.45	2.76	0.62	1,740
25	22	5.45	2.73	0.50	1,632	5.10	2.55	0.50	1,725	4.75	2.38	0.50	1,786
25	24	5.75	2.19	0.38	1,694	5.40	2.05	0.38	1,771	5.10	1.94	0.38	1,848
26	18	4.90	3.82	0.78	1,509	4.50	3.51	0.78	1,602	4.15	3.24	0.78	1,663
26	20	5.15	3.40	0.66	1,571	4.80	3.17	0.66	1,648	4.45	2.94	0.66	1,740
26	22	5.45	2.94	0.54	1,632	5.10	2.75	0.54	1,725	4.75	2.57	0.54	1,786
26	24	5.75	2.42	0.42	1,694	5.40	2.27	0.42	1,771	5.10	2.14	0.42	1,848
26	26	6.05	1.82	0.30	1,756	5.70	1.71	0.30	1,833	5.35	1.61	0.30	1,910
27	18	4.90	4.02	0.82	1,509	4.50	3.69	0.82	1,602	4.15	3.40	0.82	1,663
27	20	5.15	3.61	0.70	1,571	4.80	3.36	0.70	1,648	4.45	3.12	0.70	1,740
27	22	5.45	3.16	0.58	1,632	5.10	2.96	0.58	1,725	4.75	2.76	0.58	1,786
27	24	5.75	2.65	0.46	1,694	5.40	2.48	0.46	1,771	5.10	2.35	0.46	1,848
27	26	6.05	2.06	0.34	1,756	5.70	1.94	0.34	1,833	5.35	1.82	0.34	1,910
28	18	4.90	4.21	0.86	1,509	4.50	3.87	0.86	1,602	4.15	3.57	0.86	1,663
28	20	5.15	3.81	0.74	1,571	4.80	3.55	0.74	1,648	4.45	3.29	0.74	1,740
28	22	5.45	3.38	0.62	1,632	5.10	3.16	0.62	1,725	4.75	2.95	0.62	1,786
28	24	5.75	2.88	0.50	1,694	5.40	2.70	0.50	1,771	5.10	2.55	0.50	1,848
28	26	6.05	2.30	0.38	1,756	5.70	2.17	0.38	1,833	5.35	2.03	0.38	1,910
29	18	4.90	4.41	0.90	1,509	4.50	4.05	0.90	1,602	4.15	3.74	0.90	1,663
29	20	5.15	4.02	0.78	1,571	4.80	3.74	0.78	1,648	4.45	3.47	0.78	1,740
29	22	5.45	3.60	0.66	1,632	5.10	3.37	0.66	1,725	4.75	3.14	0.66	1,786
29	24	5.75	3.11	0.54	1,694	5.40	2.92	0.54	1,771	5.10	2.75	0.54	1,848
29	26	6.05	2.54	0.42	1,756	5.70	2.39	0.42	1,833	5.35	2.25	0.42	1,910
30	18	4.90	4.61	0.94	1,509	4.50	4.23	0.94	1,602	4.15	3.90	0.94	1,663
30	20	5.15	4.22	0.82	1,571	4.80	3.94	0.82	1,648	4.45	3.65	0.82	1,740
30	22	5.45	3.82	0.70	1,632	5.10	3.57	0.70	1,725	4.75	3.33	0.70	1,786
30	24	5.75	3.34	0.58	1,694	5.40	3.13	0.58	1,771	5.10	2.96	0.58	1,848
30	26	6.05	2.78	0.46	1,756	5.70	2.62	0.46	1,833	5.35	2.46	0.46	1,910
31	18	4.90	4.80	0.98	1,509	4.50	4.41	0.98	1,602	4.15	4.07	0.98	1,663
31	20	5.15	4.43	0.86	1,571	4.80	4.13	0.86	1,648	4.45	3.83	0.86	1,740
31	22	5.45	4.03	0.74	1,632	5.10	3.77	0.74	1,725	4.75	3.52	0.74	1,786
31	24	5.75	3.57	0.62	1,694	5.40	3.35	0.62	1,771	5.10	3.16	0.62	1,848
31	26	6.05	3.03	0.50	1,756	5.70	2.85	0.50	1,833	5.35	2.68	0.50	1,910
32	18	4.90	5.00	1.02	1,509	4.50	4.59	1.02	1,602	4.15	4.23	1.02	1,663
32	20	5.15	4.64	0.90	1,571	4.80	4.32	0.90	1,648	4.45	4.01	0.90	1,740
32	22	5.45	4.25	0.78	1,632	5.10	3.98	0.78	1,725	4.75	3.71	0.78	1,786
32	24	5.75	3.80	0.66	1,694	5.40	3.56	0.66	1,771	5.10	3.37	0.66	1,848
32	26	6.05	3.27	0.54	1,756	5.70	3.08	0.54	1,833	5.35	2.89	0.54	1,910

Note: Q : Total capacity (kW) SHF : Sensible heat factor D.B.: Dry-bulb temperature
SHC : Sensible heat capacity (kW) INPUT : Total power input (W) W.B.: Wet-bulb temperature

COOLING operation at Rated frequency
SEZ-M60DA SEZ-M60DAL / SUZ-M60VA

CAPACITY :6.1(kW) INPUT :1840(W) SHF :0.79

Indoor intake air D.B.(℃)	Indoor intake air W.B.(℃)	Outdoor intake air DB: 21				25				27				30			
		Q	SHC	SHF	INPUT	Q	SHC	SHF	INPUT	Q	SHC	SHF	INPUT	Q	SHC	SHF	INPUT
21	18	7.17	4.37	0.61	1,472	6.86	4.19	0.61	1,546	6.59	4.02	0.61	1,619	6.34	3.87	0.61	1,693
21	20	7.47	3.66	0.49	1,546	7.17	3.51	0.49	1,638	6.95	3.41	0.49	1,674	6.71	3.29	0.49	1,748
22	18	7.17	4.66	0.65	1,472	6.86	4.46	0.65	1,546	6.59	4.28	0.65	1,619	6.34	4.12	0.65	1,693
22	20	7.47	3.96	0.53	1,546	7.17	3.80	0.53	1,638	6.95	3.69	0.53	1,674	6.71	3.56	0.53	1,748
22	22	7.78	3.19	0.41	1,601	7.50	3.08	0.41	1,702	7.32	3.00	0.41	1,748	7.02	2.88	0.41	1,822
23	18	7.17	4.95	0.69	1,472	6.86	4.74	0.69	1,546	6.59	4.55	0.69	1,619	6.34	4.38	0.69	1,693
23	20	7.47	4.26	0.57	1,546	7.17	4.09	0.57	1,638	6.95	3.96	0.57	1,674	6.71	3.82	0.57	1,748
23	22	7.78	3.50	0.45	1,601	7.50	3.38	0.45	1,702	7.32	3.29	0.45	1,748	7.02	3.16	0.45	1,822
24	18	7.17	5.23	0.73	1,472	6.86	5.01	0.73	1,546	6.59	4.81	0.73	1,619	6.34	4.63	0.73	1,693
24	20	7.47	4.56	0.61	1,546	7.17	4.37	0.61	1,638	6.95	4.24	0.61	1,674	6.71	4.09	0.61	1,748
24	22	7.78	3.81	0.49	1,601	7.50	3.68	0.49	1,702	7.32	3.59	0.49	1,748	7.02	3.44	0.49	1,822
24	24	8.17	3.02	0.37	1,674	7.87	2.91	0.37	1,766	7.69	2.84	0.37	1,822	7.44	2.75	0.37	1,914
25	20	7.47	4.86	0.65	1,546	7.17	4.66	0.65	1,638	6.95	4.52	0.65	1,674	6.71	4.36	0.65	1,748
25	22	7.78	4.12	0.53	1,601	7.50	3.98	0.53	1,702	7.32	3.88	0.53	1,748	7.02	3.72	0.53	1,822
25	24	8.17	3.35	0.41	1,674	7.87	3.23	0.41	1,766	7.69	3.15	0.41	1,822	7.44	3.05	0.41	1,914
26	18	7.17	5.81	0.81	1,472	6.86	5.56	0.81	1,546	6.59	5.34	0.81	1,619	6.34	5.14	0.81	1,693
26	20	7.47	5.16	0.69	1,546	7.17	4.95	0.69	1,638	6.95	4.80	0.69	1,674	6.71	4.63	0.69	1,748
26	22	7.78	4.43	0.57	1,601	7.50	4.28	0.57	1,702	7.32	4.17	0.57	1,748	7.02	4.00	0.57	1,822
26	24	8.17	3.68	0.45	1,674	7.87	3.54	0.45	1,766	7.69	3.46	0.45	1,822	7.44	3.35	0.45	1,914
26	26	8.42	2.78	0.33	1,766	8.17	2.70	0.33	1,858	8.05	2.66	0.33	1,914	7.81	2.58	0.33	1,969
27	18	7.17	6.09	0.85	1,472	6.86	5.83	0.85	1,546	6.59	5.60	0.85	1,619	6.34	5.39	0.85	1,693
27	20	7.47	5.45	0.73	1,546	7.17	5.23	0.73	1,638	6.95	5.08	0.73	1,674	6.71	4.90	0.73	1,748
27	22	7.78	4.74	0.61	1,601	7.50	4.58	0.61	1,702	7.32	4.47	0.61	1,748	7.02	4.28	0.61	1,822
27	24	8.17	4.01	0.49	1,674	7.87	3.86	0.49	1,766	7.69	3.77	0.49	1,822	7.44	3.65	0.49	1,914
27	26	8.42	3.11	0.37	1,766	8.17	3.02	0.37	1,858	8.05	2.98	0.37	1,914	7.81	2.89	0.37	1,969
28	18	7.17	6.38	0.89	1,472	6.86	6.11	0.89	1,546	6.59	5.86	0.89	1,619	6.34	5.65	0.89	1,693
28	20	7.47	5.75	0.77	1,546	7.17	5.52	0.77	1,638	6.95	5.35	0.77	1,674	6.71	5.17	0.77	1,748
28	22	7.78	5.06	0.65	1,601	7.50	4.88	0.65	1,702	7.32	4.76	0.65	1,748	7.02	4.56	0.65	1,822
28	24	8.17	4.33	0.53	1,674	7.87	4.17	0.53	1,766	7.69	4.07	0.53	1,822	7.44	3.94	0.53	1,914
28	26	8.42	3.45	0.41	1,766	8.17	3.35	0.41	1,858	8.05	3.30	0.41	1,914	7.81	3.20	0.41	1,969
29	18	7.17	6.67	0.93	1,472	6.86	6.38	0.93	1,546	6.59	6.13	0.93	1,619	6.34	5.90	0.93	1,693
29	20	7.47	6.05	0.81	1,546	7.17	5.81	0.81	1,638	6.95	5.63	0.81	1,674	6.71	5.44	0.81	1,748
29	22	7.78	5.37	0.69	1,601	7.50	5.18	0.69	1,702	7.32	5.05	0.69	1,748	7.02	4.84	0.69	1,822
29	24	8.17	4.66	0.57	1,674	7.87	4.49	0.57	1,766	7.69	4.38	0.57	1,822	7.44	4.24	0.57	1,914
29	26	8.42	3.79	0.45	1,766	8.17	3.68	0.45	1,858	8.05	3.62	0.45	1,914	7.81	3.51	0.45	1,969
30	18	7.17	6.95	0.97	1,472	6.86	6.66	0.97	1,546	6.59	6.39	0.97	1,619	6.34	6.15	0.97	1,693
30	20	7.47	6.35	0.85	1,546	7.17	6.09	0.85	1,638	6.95	5.91	0.85	1,674	6.71	5.70	0.85	1,748
30	22	7.78	5.68	0.73	1,601	7.50	5.48	0.73	1,702	7.32	5.34	0.73	1,748	7.02	5.12	0.73	1,822
30	24	8.17	4.99	0.61	1,674	7.87	4.80	0.61	1,766	7.69	4.69	0.61	1,822	7.44	4.54	0.61	1,914
30	26	8.42	4.12	0.49	1,766	8.17	4.01	0.49	1,858	8.05	3.95	0.49	1,914	7.81	3.83	0.49	1,969
31	18	7.17	7.24	1.01	1,472	6.86	6.93	1.01	1,546	6.59	6.65	1.01	1,619	6.34	6.41	1.01	1,693
31	20	7.47	6.65	0.89	1,546	7.17	6.38	0.89	1,638	6.95	6.19	0.89	1,674	6.71	5.97	0.89	1,748
31	22	7.78	5.99	0.77	1,601	7.50	5.78	0.77	1,702	7.32	5.64	0.77	1,748	7.02	5.40	0.77	1,822
31	24	8.17	5.31	0.65	1,674	7.87	5.11	0.65	1,766	7.69	5.00	0.65	1,822	7.44	4.84	0.65	1,914
31	26	8.42	4.46	0.53	1,766	8.17	4.33	0.53	1,858	8.05	4.27	0.53	1,914	7.81	4.14	0.53	1,969
32	18	7.17	7.53	1.05	1,472	6.86	7.21	1.05	1,546	6.59	6.92	1.05	1,619	6.34	6.66	1.05	1,693
32	20	7.47	6.95	0.93	1,546	7.17	6.67	0.93	1,638	6.95	6.47	0.93	1,674	6.71	6.24	0.93	1,748
32	22	7.78	6.30	0.81	1,601	7.50	6.08	0.81	1,702	7.32	5.93	0.81	1,748	7.02	5.68	0.81	1,822
32	24	8.17	5.64	0.69	1,674	7.87	5.43	0.69	1,766	7.69	5.30	0.69	1,822	7.44	5.13	0.69	1,914
32	26	8.42	4.80	0.57	1,766	8.17	4.66	0.57	1,858	8.05	4.59	0.57	1,914	7.81	4.45	0.57	1,969

Note: Q : Total capacity (kW) SHF : Sensible heat factor D.B.: Dry-bulb temperature
SHC : Sensible heat capacity (kW) INPUT : Total power input (W) W.B.: Wet-bulb temperature

COOLING operation at Rated frequency
SEZ-M60DA SEZ-M60DAL / SUZ-M60VA

CAPACITY :6.1(kW) INPUT :1840(W) SHF :0.79

Indoor intake air D.B.(℃)	Indoor intake air W.B.(℃)	Outdoor intake air DB: 35				40				46			
		Q	SHC	SHF	INPUT	Q	SHC	SHF	INPUT	Q	SHC	SHF	INPUT
21	18	5.98	3.65	0.61	1,803	5.49	3.35	0.61	1,914	5.06	3.09	0.61	1,987
21	20	6.28	3.08	0.49	1,877	5.86	2.87	0.49	1,969	5.43	2.66	0.49	2,079
22	18	5.98	3.89	0.65	1,803	5.49	3.57	0.65	1,914	5.06	3.29	0.65	1,987
22	20	6.28	3.33	0.53	1,877	5.86	3.10	0.53	1,969	5.43	2.88	0.53	2,079
22	22	6.65	2.73	0.41	1,950	6.22	2.55	0.41	2,061	5.80	2.38	0.41	2,134
23	18	5.98	4.12	0.69	1,803	5.49	3.79	0.69	1,914	5.06	3.49	0.69	1,987
23	20	6.28	3.58	0.57	1,877	5.86	3.34	0.57	1,969	5.43	3.09	0.57	2,079
23	22	6.65	2.99	0.45	1,950	6.22	2.80	0.45	2,061	5.80	2.61	0.45	2,134
24	18	5.98	4.36	0.73	1,803	5.49	4.01	0.73	1,914	5.06	3.70	0.73	1,987
24	20	6.28	3.83	0.61	1,877	5.86	3.57	0.61	1,969	5.43	3.31	0.61	2,079
24	22	6.65	3.26	0.49	1,950	6.22	3.05	0.49	2,061	5.80	2.84	0.49	2,134
24	24	7.02	2.60	0.37	2,024	6.59	2.44	0.37	2,116	6.22	2.30	0.37	2,208
25	20	6.28	4.08	0.65	1,877	5.86	3.81	0.65	1,969	5.43	3.53	0.65	2,079
25	22	6.65	3.52	0.53	1,950	6.22	3.30	0.53	2,061	5.80	3.07	0.53	2,134
25	24	7.02	2.88	0.41	2,024	6.59	2.70	0.41	2,116	6.22	2.55	0.41	2,208
26	18	5.98	4.84	0.81	1,803	5.49	4.45	0.81	1,914	5.06	4.10	0.81	1,987
26	20	6.28	4.34	0.69	1,877	5.86	4.04	0.69	1,969	5.43	3.75	0.69	2,079
26	22	6.65	3.79	0.57	1,950	6.22	3.55	0.57	2,061	5.80	3.30	0.57	2,134
26	24	7.02	3.16	0.45	2,024	6.59	2.96	0.45	2,116	6.22	2.80	0.45	2,208
26	26	7.38	2.44	0.33	2,098	6.95	2.29	0.33	2,190	6.53	2.15	0.33	2,282
27	18	5.98	5.08	0.85	1,803	5.49	4.67	0.85	1,914	5.06	4.30	0.85	1,987
27	20	6.28	4.59	0.73	1,877	5.86	4.27	0.73	1,969	5.43	3.96	0.73	2,079
27	22	6.65	4.06	0.61	1,950	6.22	3.80	0.61	2,061	5.80	3.53	0.61	2,134
27	24	7.02	3.44	0.49	2,024	6.59	3.23	0.49	2,116	6.22	3.05	0.49	2,208
27	26	7.38	2.73	0.37	2,098	6.95	2.57	0.37	2,190	6.53	2.41	0.37	2,282
28	18	5.98	5.32	0.89	1,803	5.49	4.89	0.89	1,914	5.06	4.51	0.89	1,987
28	20	6.28	4.84	0.77	1,877	5.86	4.51	0.77	1,969	5.43	4.18	0.77	2,079
28	22	6.65	4.32	0.65	1,950	6.22	4.04	0.65	2,061	5.80	3.77	0.65	2,134
28	24	7.02	3.72	0.53	2,024	6.59	3.49	0.53	2,116	6.22	3.30	0.53	2,208
28	26	7.38	3.03	0.41	2,098	6.95	2.85	0.41	2,190	6.53	2.68	0.41	2,282
29	18	5.98	5.56	0.93	1,803	5.49	5.11	0.93	1,914	5.06	4.71	0.93	1,987
29	20	6.28	5.09	0.81	1,877	5.86	4.74	0.81	1,969	5.43	4.40	0.81	2,079
29	22	6.65	4.59	0.69	1,950	6.22	4.29	0.69	2,061	5.80	4.00	0.69	2,134
29	24	7.02	4.00	0.57	2,024	6.59	3.76	0.57	2,116	6.22	3.55	0.57	2,208
29	26	7.38	3.32	0.45	2,098	6.95	3.13	0.45	2,190	6.53	2.94	0.45	2,282
30	18	5.98	5.80	0.97	1,803	5.49	5.33	0.97	1,914	5.06	4.91	0.97	1,987
30	20	6.28	5.34	0.85	1,877	5.86	4.98	0.85	1,969	5.43	4.61	0.85	2,079
30	22	6.65	4.85	0.73	1,950	6.22	4.54	0.73	2,061	5.80	4.23	0.73	2,134
30	24	7.02	4.28	0.61	2,024	6.59	4.02	0.61	2,116	6.22	3.80	0.61	2,208
30	26	7.38	3.62	0.49	2,098	6.95	3.41	0.49	2,190	6.53	3.20	0.49	2,282
31	18	5.98	6.04	1.01	1,803	5.49	5.54	1.01	1,914	5.06	5.11	1.01	1,987
31	20	6.28	5.59	0.89	1,877	5.86	5.21	0.89	1,969	5.43	4.83	0.89	2,079
31	22	6.65	5.12	0.77	1,950	6.22	4.79	0.77	2,061	5.80	4.46	0.77	2,134
31	24	7.02	4.56	0.65	2,024	6.59	4.28	0.65	2,116	6.22	4.04	0.65	2,208
31	26	7.38	3.91	0.53	2,098	6.95	3.69	0.53	2,190	6.53	3.46	0.53	2,282
32	18	5.98	6.28	1.05	1,803	5.49	5.76	1.05	1,914	5.06	5.32	1.05	1,987
32	20	6.28	5.84	0.93	1,877	5.86	5.45	0.93	1,969	5.43	5.05	0.93	2,079
32	22	6.65	5.39	0.81	1,950	6.22	5.04	0.81	2,061	5.80	4.69	0.81	2,134
32	24	7.02	4.84	0.69	2,024	6.59	4.55	0.69	2,116	6.22	4.29	0.69	2,208
32	26	7.38	4.21	0.57	2,098	6.95	3.96	0.57	2,190	6.53	3.72	0.57	2,282

Note: Q : Total capacity (kW) SHF : Sensible heat factor D.B.: Dry-bulb temperature
SHC : Sensible heat capacity (kW) INPUT : Total power input (W) W.B.: Wet-bulb temperature

COOLING operation at Rated frequency
SEZ-M71DA SEZ-M71DAL / SUZ-M71VA

CAPACITY :7.1(kW) INPUT :2150(W) SHF :0.74

Indoor intake air D.B.(℃)	Indoor intake air W.B.(℃)	Outdoor intake air DB: 21				25				27				30			
		Q	SHC	SHF	INPUT	Q	SHC	SHF	INPUT	Q	SHC	SHF	INPUT	Q	SHC	SHF	INPUT
21	18	8.34	4.67	0.56	1,720	7.99	4.47	0.56	1,806	7.67	4.29	0.56	1,892	7.38	4.14	0.56	1,978
21	20	8.70	3.83	0.44	1,806	8.34	3.67	0.44	1,914	8.09	3.56	0.44	1,957	7.81	3.44	0.44	2,043
22	18	8.34	5.01	0.60	1,720	7.99	4.79	0.60	1,806	7.67	4.60	0.60	1,892	7.38	4.43	0.60	1,978
22	20	8.70	4.17	0.48	1,806	8.34	4.00	0.48	1,914	8.09	3.89	0.48	1,957	7.81	3.75	0.48	2,043
22	22	9.05	3.26	0.36	1,871	8.73	3.14	0.36	1,989	8.52	3.07	0.36	2,043	8.17	2.94	0.36	2,129
23	18	8.34	5.34	0.64	1,720	7.99	5.11	0.64	1,806	7.67	4.91	0.64	1,892	7.38	4.73	0.64	1,978
23	20	8.70	4.52	0.52	1,806	8.34	4.34	0.52	1,914	8.09	4.21	0.52	1,957	7.81	4.06	0.52	2,043
23	22	9.05	3.62	0.40	1,871	8.73	3.49	0.40	1,989	8.52	3.41	0.40	2,043	8.17	3.27	0.40	2,129
24	18	8.34	5.67	0.68	1,720	7.99	5.43	0.68	1,806	7.67	5.21	0.68	1,892	7.38	5.02	0.68	1,978
24	20	8.70	4.87	0.56	1,806	8.34	4.67	0.56	1,914	8.09	4.53	0.56	1,957	7.81	4.37	0.56	2,043
24	22	9.05	3.98	0.44	1,871	8.73	3.84	0.44	1,989	8.52	3.75	0.44	2,043	8.17	3.59	0.44	2,129
24	24	9.51	3.04	0.32	1,957	9.16	2.93	0.32	2,064	8.95	2.86	0.32	2,129	8.66	2.77	0.32	2,236
25	20	8.70	5.22	0.60	1,806	8.34	5.01	0.60	1,914	8.09	4.86	0.60	1,957	7.81	4.69	0.60	2,043
25	22	9.05	4.35	0.48	1,871	8.73	4.19	0.48	1,989	8.52	4.09	0.48	2,043	8.17	3.92	0.48	2,129
25	24	9.51	3.43	0.36	1,957	9.16	3.30	0.36	2,064	8.95	3.22	0.36	2,129	8.66	3.12	0.36	2,236
26	18	8.34	6.34	0.76	1,720	7.99	6.07	0.76	1,806	7.67	5.83	0.76	1,892	7.38	5.61	0.76	1,978
26	20	8.70	5.57	0.64	1,806	8.34	5.34	0.64	1,914	8.09	5.18	0.64	1,957	7.81	5.00	0.64	2,043
26	22	9.05	4.71	0.52	1,871	8.73	4.54	0.52	1,989	8.52	4.43	0.52	2,043	8.17	4.25	0.52	2,129
26	24	9.51	3.81	0.40	1,957	9.16	3.66	0.40	2,064	8.95	3.58	0.40	2,129	8.66	3.46	0.40	2,236
26	26	9.80	2.74	0.28	2,064	9.51	2.66	0.28	2,172	9.37	2.62	0.28	2,236	9.09	2.54	0.28	2,301
27	18	8.34	6.67	0.80	1,720	7.99	6.39	0.80	1,806	7.67	6.13	0.80	1,892	7.38	5.91	0.80	1,978
27	20	8.70	5.91	0.68	1,806	8.34	5.67	0.68	1,914	8.09	5.50	0.68	1,957	7.81	5.31	0.68	2,043
27	22	9.05	5.07	0.56	1,871	8.73	4.89	0.56	1,989	8.52	4.77	0.56	2,043	8.17	4.57	0.56	2,129
27	24	9.51	4.19	0.44	1,957	9.16	4.03	0.44	2,064	8.95	3.94	0.44	2,129	8.66	3.81	0.44	2,236
27	26	9.80	3.14	0.32	2,064	9.51	3.04	0.32	2,172	9.37	3.00	0.32	2,236	9.09	2.91	0.32	2,301
28	18	8.34	7.01	0.84	1,720	7.99	6.71	0.84	1,806	7.67	6.44	0.84	1,892	7.38	6.20	0.84	1,978
28	20	8.70	6.26	0.72	1,806	8.34	6.01	0.72	1,914	8.09	5.83	0.72	1,957	7.81	5.62	0.72	2,043
28	22	9.05	5.43	0.60	1,871	8.73	5.24	0.60	1,989	8.52	5.11	0.60	2,043	8.17	4.90	0.60	2,129
28	24	9.51	4.57	0.48	1,957	9.16	4.40	0.48	2,064	8.95	4.29	0.48	2,129	8.66	4.16	0.48	2,236
28	26	9.80	3.53	0.36	2,064	9.51	3.43	0.36	2,172	9.37	3.37	0.36	2,236	9.09	3.27	0.36	2,301
29	18	8.34	7.34	0.88	1,720	7.99	7.03	0.88	1,806	7.67	6.75	0.88	1,892	7.38	6.50	0.88	1,978
29	20	8.70	6.61	0.76	1,806	8.34	6.34	0.76	1,914	8.09	6.15	0.76	1,957	7.81	5.94	0.76	2,043
29	22	9.05	5.79	0.64	1,871	8.73	5.59	0.64	1,989	8.52	5.45	0.64	2,043	8.17	5.23	0.64	2,129
29	24	9.51	4.95	0.52	1,957	9.16	4.76	0.52	2,064	8.95	4.65	0.52	2,129	8.66	4.50	0.52	2,236
29	26	9.80	3.92	0.40	2,064	9.51	3.81	0.40	2,172	9.37	3.75	0.40	2,236	9.09	3.64	0.40	2,301
30	18	8.34	7.68	0.92	1,720	7.99	7.35	0.92	1,806	7.67	7.05	0.92	1,892	7.38	6.79	0.92	1,978
30	20	8.70	6.96	0.80	1,806	8.34	6.67	0.80	1,914	8.09	6.48	0.80	1,957	7.81	6.25	0.80	2,043
30	22	9.05	6.16	0.68	1,871	8.73	5.94	0.68	1,989	8.52	5.79	0.68	2,043	8.17	5.55	0.68	2,129
30	24	9.51	5.33	0.56	1,957	9.16	5.13	0.56	2,064	8.95	5.01	0.56	2,129	8.66	4.85	0.56	2,236
30	26	9.80	4.31	0.44	2,064	9.51	4.19	0.44	2,172	9.37	4.12	0.44	2,236	9.09	4.00	0.44	2,301
31	18	8.34	8.01	0.96	1,720	7.99	7.67	0.96	1,806	7.67	7.36	0.96	1,892	7.38	7.09	0.96	1,978
31	20	8.70	7.31	0.84	1,806	8.34	7.01	0.84	1,914	8.09	6.80	0.84	1,957	7.81	6.56	0.84	2,043
31	22	9.05	6.52	0.72	1,871	8.73	6.29	0.72	1,989	8.52	6.13	0.72	2,043	8.17	5.88	0.72	2,129
31	24	9.51	5.71	0.60	1,957	9.16	5.50	0.60	2,064	8.95	5.37	0.60	2,129	8.66	5.20	0.60	2,236
31	26	9.80	4.70	0.48	2,064	9.51	4.57	0.48	2,172	9.37	4.50	0.48	2,236	9.09	4.36	0.48	2,301
32	18	8.34	8.34	1.00	1,720	7.99	7.99	1.00	1,806	7.67	7.67	1.00	1,892	7.38	7.38	1.00	1,978
32	20	8.70	7.65	0.88	1,806	8.34	7.34	0.88	1,914	8.09	7.12	0.88	1,957	7.81	6.87	0.88	2,043
32	22	9.05	6.88	0.76	1,871	8.73	6.64	0.76	1,989	8.52	6.48	0.76	2,043	8.17	6.21	0.76	2,129
32	24	9.51	6.09	0.64	1,957	9.16	5.86	0.64	2,064	8.95	5.73	0.64	2,129	8.66	5.54	0.64	2,236
32	26	9.80	5.09	0.52	2,064	9.51	4.95	0.52	2,172	9.37	4.87	0.52	2,236	9.09	4.73	0.52	2,301

Note: Q : Total capacity (kW) SHF : Sensible heat factor D.B.: Dry-bulb temperature
SHC : Sensible heat capacity (kW) INPUT : Total power input (W) W.B.: Wet-bulb temperature

COOLING operation at Rated frequency
SEZ-M71DA SEZ-M71DAL / SUZ-M71VA

CAPACITY :7.1(kW) INPUT :2150(W) SHF :0.74

Indoor intake air D.B.(℃)	Indoor intake air W.B.(℃)	Outdoor intake air DB: 35				40				46			
		Q	SHC	SHF	INPUT	Q	SHC	SHF	INPUT	Q	SHC	SHF	INPUT
21	18	6.96	3.90	0.56	2,107	6.39	3.58	0.56	2,236	5.89	3.30	0.56	2,322
21	20	7.31	3.22	0.44	2,193	6.82	3.00	0.44	2,301	6.32	2.78	0.44	2,430
22	18	6.96	4.17	0.60	2,107	6.39	3.83	0.60	2,236	5.89	3.54	0.60	2,322
22	20	7.31	3.51	0.48	2,193	6.82	3.27	0.48	2,301	6.32	3.03	0.48	2,430
22	22	7.74	2.79	0.36	2,279	7.24	2.61	0.36	2,408	6.75	2.43	0.36	2,494
23	18	6.96	4.45	0.64	2,107	6.39	4.09	0.64	2,236	5.89	3.77	0.64	2,322
23	20	7.31	3.80	0.52	2,193	6.82	3.54	0.52	2,301	6.32	3.29	0.52	2,430
23	22	7.74	3.10	0.40	2,279	7.24	2.90	0.40	2,408	6.75	2.70	0.40	2,494
24	18	6.96	4.73	0.68	2,107	6.39	4.35	0.68	2,236	5.89	4.01	0.68	2,322
24	20	7.31	4.10	0.56	2,193	6.82	3.82	0.56	2,301	6.32	3.54	0.56	2,430
24	22	7.74	3.41	0.44	2,279	7.24	3.19	0.44	2,408	6.75	2.97	0.44	2,494
24	24	8.17	2.61	0.32	2,365	7.67	2.45	0.32	2,473	7.24	2.32	0.32	2,580
25	20	7.31	4.39	0.60	2,193	6.82	4.09	0.60	2,301	6.32	3.79	0.60	2,430
25	22	7.74	3.71	0.48	2,279	7.24	3.48	0.48	2,408	6.75	3.24	0.48	2,494
25	24	8.17	2.94	0.36	2,365	7.67	2.76	0.36	2,473	7.24	2.61	0.36	2,580
26	18	6.96	5.29	0.76	2,107	6.39	4.86	0.76	2,236	5.89	4.48	0.76	2,322
26	20	7.31	4.68	0.64	2,193	6.82	4.36	0.64	2,301	6.32	4.04	0.64	2,430
26	22	7.74	4.02	0.52	2,279	7.24	3.77	0.52	2,408	6.75	3.51	0.52	2,494
26	24	8.17	3.27	0.40	2,365	7.67	3.07	0.40	2,473	7.24	2.90	0.40	2,580
26	26	8.59	2.41	0.28	2,451	8.09	2.27	0.28	2,559	7.60	2.13	0.28	2,666
27	18	6.96	5.57	0.80	2,107	6.39	5.11	0.80	2,236	5.89	4.71	0.80	2,322
27	20	7.31	4.97	0.68	2,193	6.82	4.63	0.68	2,301	6.32	4.30	0.68	2,430
27	22	7.74	4.33	0.56	2,279	7.24	4.06	0.56	2,408	6.75	3.78	0.56	2,494
27	24	8.17	3.59	0.44	2,365	7.67	3.37	0.44	2,473	7.24	3.19	0.44	2,580
27	26	8.59	2.75	0.32	2,451	8.09	2.59	0.32	2,559	7.60	2.43	0.32	2,666
28	18	6.96	5.84	0.84	2,107	6.39	5.37	0.84	2,236	5.89	4.95	0.84	2,322
28	20	7.31	5.27	0.72	2,193	6.82	4.91	0.72	2,301	6.32	4.55	0.72	2,430
28	22	7.74	4.64	0.60	2,279	7.24	4.35	0.60	2,408	6.75	4.05	0.60	2,494
28	24	8.17	3.92	0.48	2,365	7.67	3.68	0.48	2,473	7.24	3.48	0.48	2,580
28	26	8.59	3.09	0.36	2,451	8.09	2.91	0.36	2,559	7.60	2.73	0.36	2,666
29	18	6.96	6.12	0.88	2,107	6.39	5.62	0.88	2,236	5.89	5.19	0.88	2,322
29	20	7.31	5.56	0.76	2,193	6.82	5.18	0.76	2,301	6.32	4.80	0.76	2,430
29	22	7.74	4.95	0.64	2,279	7.24	4.63	0.64	2,408	6.75	4.32	0.64	2,494
29	24	8.17	4.25	0.52	2,365	7.67	3.99	0.52	2,473	7.24	3.77	0.52	2,580
29	26	8.59	3.44	0.40	2,451	8.09	3.24	0.40	2,559	7.60	3.04	0.40	2,666
30	18	6.96	6.40	0.92	2,107	6.39	5.88	0.92	2,236	5.89	5.42	0.92	2,322
30	20	7.31	5.85	0.80	2,193	6.82	5.45	0.80	2,301	6.32	5.06	0.80	2,430
30	22	7.74	5.26	0.68	2,279	7.24	4.92	0.68	2,408	6.75	4.59	0.68	2,494
30	24	8.17	4.57	0.56	2,365	7.67	4.29	0.56	2,473	7.24	4.06	0.56	2,580
30	26	8.59	3.78	0.44	2,451	8.09	3.56	0.44	2,559	7.60	3.34	0.44	2,666
31	18	6.96	6.68	0.96	2,107	6.39	6.13	0.96	2,236	5.89	5.66	0.96	2,322
31	20	7.31	6.14	0.84	2,193	6.82	5.73	0.84	2,301	6.32	5.31	0.84	2,430
31	22	7.74	5.57	0.72	2,279	7.24	5.21	0.72	2,408	6.75	4.86	0.72	2,494
31	24	8.17	4.90	0.60	2,365	7.67	4.60	0.60	2,473	7.24	4.35	0.60	2,580
31	26	8.59	4.12	0.48	2,451	8.09	3.89	0.48	2,559	7.60	3.65	0.48	2,666
32	18	6.96	6.96	1.00	2,107	6.39	6.39	1.00	2,236	5.89	5.89	1.00	2,322
32	20	7.31	6.44	0.88	2,193	6.82	6.00	0.88	2,301	6.32	5.56	0.88	2,430
32	22	7.74	5.88	0.76	2,279	7.24	5.50	0.76	2,408	6.75	5.13	0.76	2,494
32	24	8.17	5.23	0.64	2,365	7.67	4.91	0.64	2,473	7.24	4.63	0.64	2,580
32	26	8.59	4.47	0.52	2,451	8.09	4.21	0.52	2,559	7.60	3.95	0.52	2,666

Note: Q : Total capacity (kW) SHF : Sensible heat factor D.B.: Dry-bulb temperature
SHC : Sensible heat capacity (kW) INPUT : Total power input (W) W.B.: Wet-bulb temperature

HEATING operation

SEZ-M25DA SEZ-M25DAL / SUZ-M25VA at Rated frequency

CAPACITY : 2.9(kW) INPUT : 800(W)

INDOOR DB(°C)	OUTDOOR WB(°C)															
	-10		-15		-5		0		5		10		15		20	
	CA	P.C.	CA	P.C.	CA	P.C.	CA	P.C.	CA	P.C.	CA	P.C.	CA	P.C.	CA	P.C.
15	1.45	416	1.83	520	2.20	624	2.58	704	2.96	760	3.34	808	3.68	832	4.06	848
21	1.36	443	1.74	560	2.09	664	2.47	736	2.81	792	3.19	832	3.54	856	3.90	888
26	1.19	480	1.57	600	1.94	704	2.29	776	2.67	832	3.05	872	3.39	896	3.77	920

SEZ-M35DA SEZ-M35DAL / SUZ-M35VA at Rated frequency

CAPACITY : 4.2(kW) INPUT : 1070(W)

INDOOR DB(°C)	OUTDOOR WB(°C)															
	-10		-15		-5		0		5		10		15		20	
	CA	P.C.	CA	P.C.	CA	P.C.	CA	P.C.	CA	P.C.	CA	P.C.	CA	P.C.	CA	P.C.
15	2.10	556	2.65	696	3.19	835	3.74	942	4.28	1017	4.83	1081	5.33	1113	5.88	1134
21	1.97	593	2.52	749	3.02	888	3.57	984	4.07	1059	4.62	1113	5.12	1145	5.65	1188
26	1.72	642	2.27	803	2.81	942	3.32	1038	3.86	1113	4.41	1166	4.91	1198	5.46	1231

SEZ-M50DA SEZ-M50DAL / SUZ-M50VA at Rated frequency

CAPACITY : 6.0(kW) INPUT : 1610(W)

INDOOR DB(°C)	OUTDOOR WB(°C)															
	-10		-15		-5		0		5		10		15		20	
	CA	P.C.	CA	P.C.	CA	P.C.	CA	P.C.	CA	P.C.	CA	P.C.	CA	P.C.	CA	P.C.
15	3.00	837	3.78	1047	4.56	1256	5.34	1417	6.12	1530	6.90	1626	7.62	1674	8.40	1707
21	2.82	892	3.60	1127	4.32	1336	5.10	1481	5.82	1594	6.60	1674	7.32	1723	8.07	1787
26	2.46	966	3.24	1208	4.02	1417	4.74	1562	5.52	1674	6.30	1755	7.02	1803	7.80	1852

SEZ-M60DA, SEZ-M60DAL / SUZ-M60VA at Rated frequency

CAPACITY : 7.4(kW) INPUT : 2040(W)

INDOOR DB(°C)	OUTDOOR WB(°C)															
	-10		-15		-5		0		5		10		15		20	
	CA	P.C.	CA	P.C.	CA	P.C.	CA	P.C.	CA	P.C.	CA	P.C.	CA	P.C.	CA	P.C.
15	3.70	1061	4.66	1326	5.62	1591	6.59	1795	7.55	1938	8.51	2060	9.40	2122	10.36	2162
21	3.48	1130	4.44	1428	5.33	1693	6.29	1877	7.18	2020	8.14	2122	9.03	2183	9.95	2264
26	3.03	1224	4.00	1530	4.96	1795	5.85	1979	6.81	2122	7.77	2224	8.66	2285	9.62	2346

SEZ-M71DA, SEZ-M71DAL / SUZ-M71VA at Rated frequency

CAPACITY : 8.0(kW) INPUT : 2280(W)

INDOOR DB(°C)	OUTDOOR WB(°C)															
	-10		-15		-5		0		5		10		15		20	
	CA	P.C.	CA	P.C.	CA	P.C.	CA	P.C.	CA	P.C.	CA	P.C.	CA	P.C.	CA	P.C.
15	4.00	1186	5.04	1482	6.08	1778	7.12	2006	8.16	2166	9.20	2303	10.16	2371	11.20	2417
21	3.76	1263	4.80	1596	5.76	1892	6.80	2098	7.76	2257	8.80	2371	9.76	2440	10.76	2531
26	3.28	1368	4.32	1710	5.36	2006	6.32	2212	7.36	2371	8.40	2485	9.36	2554	10.40	2622

Note: Q : Total capacity (kW) INPUT : Total power input (W) D.B.: Dry-bulb temperature W.B.: Wet-bulb temperature

B.2.5.2 R410A type

COOLING operation at Rated frequency
SEZ-M25DA SEZ-M25DAL / SUZ-KA25VA6

CAPACITY : 2.5(kW) INPUT : 730(W) SHF : 0.80

		OUTDOOR DB(℃)															
INDOOR	INDOOR	21				25				27				30			
DB(℃)	WB(℃)	Q	SHC	SHF	INPUT	Q	SHC	SHF	INPUT	Q	SHC	SHF	INPUT	Q	SHC	SHF	INPUT
21	18	2.94	1.82	0.62	584	2.81	1.74	0.62	613	2.70	1.67	0.62	642	2.60	1.61	0.62	672
21	20	3.06	1.53	0.50	613	2.94	1.47	0.50	650	2.85	1.43	0.50	664	2.75	1.38	0.50	694
22	18	2.94	1.94	0.66	584	2.81	1.86	0.66	613	2.70	1.78	0.66	642	2.60	1.72	0.66	672
22	20	3.06	1.65	0.54	613	2.94	1.59	0.54	650	2.85	1.54	0.54	664	2.75	1.49	0.54	694
22	22	3.19	1.34	0.42	635	3.08	1.29	0.42	675	3.00	1.26	0.42	694	2.88	1.21	0.42	723
23	18	2.94	2.06	0.70	584	2.81	1.97	0.70	613	2.70	1.89	0.70	642	2.60	1.82	0.70	672
23	20	3.06	1.78	0.58	613	2.94	1.70	0.58	650	2.85	1.65	0.58	664	2.75	1.60	0.58	694
23	22	3.19	1.47	0.46	635	3.08	1.41	0.46	675	3.00	1.38	0.46	694	2.88	1.32	0.46	723
24	18	2.94	2.17	0.74	584	2.81	2.08	0.74	613	2.70	2.00	0.74	642	2.60	1.92	0.74	672
24	20	3.06	1.90	0.62	613	2.94	1.82	0.62	650	2.85	1.77	0.62	664	2.75	1.71	0.62	694
24	22	3.19	1.59	0.50	635	3.08	1.54	0.50	675	3.00	1.50	0.50	694	2.88	1.44	0.50	723
24	24	3.35	1.27	0.38	664	3.23	1.23	0.38	701	3.15	1.20	0.38	723	3.05	1.16	0.38	759
25	20	3.06	2.02	0.66	613	2.94	1.94	0.66	650	2.85	1.88	0.66	664	2.75	1.82	0.66	694
25	22	3.19	1.72	0.54	635	3.08	1.66	0.54	675	3.00	1.62	0.54	694	2.88	1.55	0.54	723
25	24	3.35	1.41	0.42	664	3.23	1.35	0.42	701	3.15	1.32	0.42	723	3.05	1.28	0.42	759
26	18	2.94	2.41	0.82	584	2.81	2.31	0.82	613	2.70	2.21	0.82	642	2.60	2.13	0.82	672
26	20	3.06	2.14	0.70	613	2.94	2.06	0.70	650	2.85	2.00	0.70	664	2.75	1.93	0.70	694
26	22	3.19	1.85	0.58	635	3.08	1.78	0.58	675	3.00	1.74	0.58	694	2.88	1.67	0.58	723
26	24	3.35	1.54	0.46	664	3.23	1.48	0.46	701	3.15	1.45	0.46	723	3.05	1.40	0.46	759
26	26	3.45	1.17	0.34	701	3.35	1.14	0.34	737	3.30	1.12	0.34	759	3.20	1.09	0.34	781
27	18	2.94	2.53	0.86	584	2.81	2.42	0.86	613	2.70	2.32	0.86	642	2.60	2.24	0.86	672
27	20	3.06	2.27	0.74	613	2.94	2.17	0.74	650	2.85	2.11	0.74	664	2.75	2.04	0.74	694
27	22	3.19	1.98	0.62	635	3.08	1.91	0.62	675	3.00	1.86	0.62	694	2.88	1.78	0.62	723
27	24	3.35	1.68	0.50	664	3.23	1.61	0.50	701	3.15	1.58	0.50	723	3.05	1.53	0.50	759
27	26	3.45	1.31	0.38	701	3.35	1.27	0.38	737	3.30	1.25	0.38	759	3.20	1.22	0.38	781
28	18	2.94	2.64	0.90	584	2.81	2.53	0.90	613	2.70	2.43	0.90	642	2.60	2.34	0.90	672
28	20	3.06	2.39	0.78	613	2.94	2.29	0.78	650	2.85	2.22	0.78	664	2.75	2.15	0.78	694
28	22	3.19	2.10	0.66	635	3.08	2.03	0.66	675	3.00	1.98	0.66	694	2.88	1.90	0.66	723
28	24	3.35	1.81	0.54	664	3.23	1.74	0.54	701	3.15	1.70	0.54	723	3.05	1.65	0.54	759
28	26	3.45	1.45	0.42	701	3.35	1.41	0.42	737	3.30	1.39	0.42	759	3.20	1.34	0.42	781
29	18	2.94	2.76	0.94	584	2.81	2.64	0.94	613	2.70	2.54	0.94	642	2.60	2.44	0.94	672
29	20	3.06	2.51	0.82	613	2.94	2.41	0.82	650	2.85	2.34	0.82	664	2.75	2.26	0.82	694
29	22	3.19	2.23	0.70	635	3.08	2.15	0.70	675	3.00	2.10	0.70	694	2.88	2.01	0.70	723
29	24	3.35	1.94	0.58	664	3.23	1.87	0.58	701	3.15	1.83	0.58	723	3.05	1.77	0.58	759
29	26	3.45	1.59	0.46	701	3.35	1.54	0.46	737	3.30	1.52	0.46	759	3.20	1.47	0.46	781
30	18	2.94	2.88	0.98	584	2.81	2.76	0.98	613	2.70	2.65	0.98	642	2.60	2.55	0.98	672
30	20	3.06	2.63	0.86	613	2.94	2.53	0.86	650	2.85	2.45	0.86	664	2.75	2.37	0.86	694
30	22	3.19	2.36	0.74	635	3.08	2.28	0.74	675	3.00	2.22	0.74	694	2.88	2.13	0.74	723
30	24	3.35	2.08	0.62	664	3.23	2.00	0.62	701	3.15	1.95	0.62	723	3.05	1.89	0.62	759
30	26	3.45	1.73	0.50	701	3.35	1.68	0.50	737	3.30	1.65	0.50	759	3.20	1.60	0.50	781
31	18	2.94	2.94	1.00	584	2.81	2.81	1.00	613	2.70	2.70	1.00	642	2.60	2.60	1.00	672
31	20	3.06	2.76	0.90	613	2.94	2.64	0.90	650	2.85	2.57	0.90	664	2.75	2.48	0.90	694
31	22	3.19	2.49	0.78	635	3.08	2.40	0.78	675	3.00	2.34	0.78	694	2.88	2.24	0.78	723
31	24	3.35	2.21	0.66	664	3.23	2.13	0.66	701	3.15	2.08	0.66	723	3.05	2.01	0.66	759
31	26	3.45	1.86	0.54	701	3.35	1.81	0.54	737	3.30	1.78	0.54	759	3.20	1.73	0.54	781
32	18	2.94	2.94	1.00	584	2.81	2.81	1.00	613	2.70	2.70	1.00	642	2.60	2.60	1.00	672
32	20	3.06	2.88	0.94	613	2.94	2.76	0.94	650	2.85	2.68	0.94	664	2.75	2.59	0.94	694
32	22	3.19	2.61	0.82	635	3.08	2.52	0.82	675	3.00	2.46	0.82	694	2.88	2.36	0.82	723
32	24	3.35	2.35	0.70	664	3.23	2.26	0.70	701	3.15	2.21	0.70	723	3.05	2.14	0.70	759
32	26	3.45	2.00	0.58	701	3.35	1.94	0.58	737	3.30	1.91	0.58	759	3.20	1.86	0.58	781

Note: Q : Total capacity (kW) SHF : Sensible heat factor D.B.: Dry-bulb temperature
SHC : Sensible heat capacity (kW) INPUT : Total power input (W) W.B.: Wet-bulb temperature

COOLING operation at Rated frequency
SEZ-M25DA SEZ-M25DAL / SUZ-KA25VA6
CAPACITY : 2.5(kW) INPUT : 730(W) SHF : 0.80

		OUTDOOR DB(℃)											
INDOOR	INDOOR	35				40				46			
DB(℃)	WB(℃)	Q	SHC	SHF	INPUT	Q	SHC	SHF	INPUT	Q	SHC	SHF	INPUT
21	18	2.45	1.52	0.62	715	2.25	1.40	0.62	759	2.08	1.29	0.62	788
21	20	2.58	1.29	0.50	745	2.40	1.20	0.50	781	2.23	1.11	0.50	825
22	18	2.45	1.62	0.66	715	2.25	1.49	0.66	759	2.08	1.37	0.66	788
22	20	2.58	1.39	0.54	745	2.40	1.30	0.54	781	2.23	1.20	0.54	825
22	22	2.73	1.14	0.42	774	2.55	1.07	0.42	818	2.38	1.00	0.42	847
23	18	2.45	1.72	0.70	715	2.25	1.58	0.70	759	2.08	1.45	0.70	788
23	20	2.58	1.49	0.58	745	2.40	1.39	0.58	781	2.23	1.29	0.58	825
23	22	2.73	1.25	0.46	774	2.55	1.17	0.46	818	2.38	1.09	0.46	847
24	18	2.45	1.81	0.74	715	2.25	1.67	0.74	759	2.08	1.54	0.74	788
24	20	2.58	1.60	0.62	745	2.40	1.49	0.62	781	2.23	1.38	0.62	825
24	22	2.73	1.36	0.50	774	2.55	1.28	0.50	818	2.38	1.19	0.50	847
24	24	2.88	1.09	0.38	803	2.70	1.03	0.38	840	2.55	0.97	0.38	876
25	20	2.58	1.70	0.66	745	2.40	1.58	0.66	781	2.23	1.47	0.66	825
25	22	2.73	1.47	0.54	774	2.55	1.38	0.54	818	2.38	1.28	0.54	847
25	24	2.88	1.21	0.42	803	2.70	1.13	0.42	840	2.55	1.07	0.42	876
26	18	2.45	2.01	0.82	715	2.25	1.85	0.82	759	2.08	1.70	0.82	788
26	20	2.58	1.80	0.70	745	2.40	1.68	0.70	781	2.23	1.56	0.70	825
26	22	2.73	1.58	0.58	774	2.55	1.48	0.58	818	2.38	1.38	0.58	847
26	24	2.88	1.32	0.46	803	2.70	1.24	0.46	840	2.55	1.17	0.46	876
26	26	3.03	1.03	0.34	832	2.85	0.97	0.34	869	2.68	0.91	0.34	905
27	18	2.45	2.11	0.86	715	2.25	1.94	0.86	759	2.08	1.78	0.86	788
27	20	2.58	1.91	0.74	745	2.40	1.78	0.74	781	2.23	1.65	0.74	825
27	22	2.73	1.69	0.62	774	2.55	1.58	0.62	818	2.38	1.47	0.62	847
27	24	2.88	1.44	0.50	803	2.70	1.35	0.50	840	2.55	1.28	0.50	876
27	26	3.03	1.15	0.38	832	2.85	1.08	0.38	869	2.68	1.02	0.38	905
28	18	2.45	2.21	0.90	715	2.25	2.03	0.90	759	2.08	1.87	0.90	788
28	20	2.58	2.01	0.78	745	2.40	1.87	0.78	781	2.23	1.74	0.78	825
28	22	2.73	1.80	0.66	774	2.55	1.68	0.66	818	2.38	1.57	0.66	847
28	24	2.88	1.55	0.54	803	2.70	1.46	0.54	840	2.55	1.38	0.54	876
28	26	3.03	1.27	0.42	832	2.85	1.20	0.42	869	2.68	1.12	0.42	905
29	18	2.45	2.30	0.94	715	2.25	2.12	0.94	759	2.08	1.95	0.94	788
29	20	2.58	2.11	0.82	745	2.40	1.97	0.82	781	2.23	1.82	0.82	825
29	22	2.73	1.91	0.70	774	2.55	1.79	0.70	818	2.38	1.66	0.70	847
29	24	2.88	1.67	0.58	803	2.70	1.57	0.58	840	2.55	1.48	0.58	876
29	26	3.03	1.39	0.46	832	2.85	1.31	0.46	869	2.68	1.23	0.46	905
30	18	2.45	2.40	0.98	715	2.25	2.21	0.98	759	2.08	2.03	0.98	788
30	20	2.58	2.21	0.86	745	2.40	2.06	0.86	781	2.23	1.91	0.86	825
30	22	2.73	2.02	0.74	774	2.55	1.89	0.74	818	2.38	1.76	0.74	847
30	24	2.88	1.78	0.62	803	2.70	1.67	0.62	840	2.55	1.58	0.62	876
30	26	3.03	1.51	0.50	832	2.85	1.43	0.50	869	2.68	1.34	0.50	905
31	18	2.45	2.45	1.00	715	2.25	2.25	1.00	759	2.08	2.08	1.00	788
31	20	2.58	2.32	0.90	745	2.40	2.16	0.90	781	2.23	2.00	0.90	825
31	22	2.73	2.13	0.78	774	2.55	1.99	0.78	818	2.38	1.85	0.78	847
31	24	2.88	1.90	0.66	803	2.70	1.78	0.66	840	2.55	1.68	0.66	876
31	26	3.03	1.63	0.54	832	2.85	1.54	0.54	869	2.68	1.44	0.54	905
32	18	2.45	2.45	1.00	715	2.25	2.25	1.00	759	2.08	2.08	1.00	788
32	20	2.58	2.42	0.94	745	2.40	2.26	0.94	781	2.23	2.09	0.94	825
32	22	2.73	2.23	0.82	774	2.55	2.09	0.82	818	2.38	1.95	0.82	847
32	24	2.88	2.01	0.70	803	2.70	1.89	0.70	840	2.55	1.79	0.70	876
32	26	3.03	1.75	0.58	832	2.85	1.65	0.58	869	2.68	1.55	0.58	905

Note: Q : Total capacity (kW) SHF : Sensible heat factor D.B.: Dry-bulb temperature
SHC : Sensible heat capacity (kW) INPUT : Total power input (W) W.B.: Wet-bulb temperature

COOLING operation at Rated frequency
SEZ-M35DA SEZ-M35DAL / SUZ-KA35VA6

CAPACITY : 3.5(kW) INPUT : 1010(W) SHF : 0.76

		OUTDOOR DB(℃)															
INDOOR	INDOOR	21				25				27				30			
DB(℃)	WB(℃)	Q	SHC	SHF	INPUT	Q	SHC	SHF	INPUT	Q	SHC	SHF	INPUT	Q	SHC	SHF	INPUT
21	18	4.11	2.39	0.58	808	3.94	2.28	0.58	848	3.78	2.19	0.58	889	3.64	2.11	0.58	929
21	20	4.29	1.97	0.46	848	4.11	1.89	0.46	899	3.99	1.84	0.46	919	3.85	1.77	0.46	960
22	18	4.11	2.55	0.62	808	3.94	2.44	0.62	848	3.78	2.34	0.62	889	3.64	2.26	0.62	929
22	20	4.29	2.14	0.50	848	4.11	2.06	0.50	899	3.99	2.00	0.50	919	3.85	1.93	0.50	960
22	22	4.46	1.70	0.38	879	4.31	1.64	0.38	934	4.20	1.60	0.38	960	4.03	1.53	0.38	1,000
23	18	4.11	2.71	0.66	808	3.94	2.60	0.66	848	3.78	2.49	0.66	889	3.64	2.40	0.66	929
23	20	4.29	2.32	0.54	848	4.11	2.22	0.54	899	3.99	2.15	0.54	919	3.85	2.08	0.54	960
23	22	4.46	1.87	0.42	879	4.31	1.81	0.42	934	4.20	1.76	0.42	960	4.03	1.69	0.42	1,000
24	18	4.11	2.88	0.70	808	3.94	2.76	0.70	848	3.78	2.65	0.70	889	3.64	2.55	0.70	929
24	20	4.29	2.49	0.58	848	4.11	2.39	0.58	899	3.99	2.31	0.58	919	3.85	2.23	0.58	960
24	22	4.46	2.05	0.46	879	4.31	1.98	0.46	934	4.20	1.93	0.46	960	4.03	1.85	0.46	1,000
24	24	4.69	1.59	0.34	919	4.52	1.54	0.34	970	4.41	1.50	0.34	1,000	4.27	1.45	0.34	1,050
25	20	4.29	2.66	0.62	848	4.11	2.55	0.62	899	3.99	2.47	0.62	919	3.85	2.39	0.62	960
25	22	4.46	2.23	0.50	879	4.31	2.15	0.50	934	4.20	2.10	0.50	960	4.03	2.01	0.50	1,000
25	24	4.69	1.78	0.38	919	4.52	1.72	0.38	970	4.41	1.68	0.38	1,000	4.27	1.62	0.38	1,050
26	18	4.11	3.21	0.78	808	3.94	3.07	0.78	848	3.78	2.95	0.78	889	3.64	2.84	0.78	929
26	20	4.29	2.83	0.66	848	4.11	2.71	0.66	899	3.99	2.63	0.66	919	3.85	2.54	0.66	960
26	22	4.46	2.41	0.54	879	4.31	2.32	0.54	934	4.20	2.27	0.54	960	4.03	2.17	0.54	1,000
26	24	4.69	1.97	0.42	919	4.52	1.90	0.42	970	4.41	1.85	0.42	1,000	4.27	1.79	0.42	1,050
26	26	4.83	1.45	0.30	970	4.69	1.41	0.30	1,020	4.62	1.39	0.30	1,050	4.48	1.34	0.30	1,081
27	18	4.11	3.37	0.82	808	3.94	3.23	0.82	848	3.78	3.10	0.82	889	3.64	2.98	0.82	929
27	20	4.29	3.00	0.70	848	4.11	2.88	0.70	899	3.99	2.79	0.70	919	3.85	2.70	0.70	960
27	22	4.46	2.59	0.58	879	4.31	2.50	0.58	934	4.20	2.44	0.58	960	4.03	2.33	0.58	1,000
27	24	4.69	2.16	0.46	919	4.52	2.08	0.46	970	4.41	2.03	0.46	1,000	4.27	1.96	0.46	1,050
27	26	4.83	1.64	0.34	970	4.69	1.59	0.34	1,020	4.62	1.57	0.34	1,050	4.48	1.52	0.34	1,081
28	18	4.11	3.54	0.86	808	3.94	3.39	0.86	848	3.78	3.25	0.86	889	3.64	3.13	0.86	929
28	20	4.29	3.17	0.74	848	4.11	3.04	0.74	899	3.99	2.95	0.74	919	3.85	2.85	0.74	960
28	22	4.46	2.77	0.62	879	4.31	2.67	0.62	934	4.20	2.60	0.62	960	4.03	2.50	0.62	1,000
28	24	4.69	2.35	0.50	919	4.52	2.26	0.50	970	4.41	2.21	0.50	1,000	4.27	2.14	0.50	1,050
28	26	4.83	1.84	0.38	970	4.69	1.78	0.38	1,020	4.62	1.76	0.38	1,050	4.48	1.70	0.38	1,081
29	18	4.11	3.70	0.90	808	3.94	3.54	0.90	848	3.78	3.40	0.90	889	3.64	3.28	0.90	929
29	20	4.29	3.34	0.78	848	4.11	3.21	0.78	899	3.99	3.11	0.78	919	3.85	3.00	0.78	960
29	22	4.46	2.95	0.66	879	4.31	2.84	0.66	934	4.20	2.77	0.66	960	4.03	2.66	0.66	1,000
29	24	4.69	2.53	0.54	919	4.52	2.44	0.54	970	4.41	2.38	0.54	1,000	4.27	2.31	0.54	1,050
29	26	4.83	2.03	0.42	970	4.69	1.97	0.42	1,020	4.62	1.94	0.42	1,050	4.48	1.88	0.42	1,081
30	18	4.11	3.87	0.94	808	3.94	3.70	0.94	848	3.78	3.55	0.94	889	3.64	3.42	0.94	929
30	20	4.29	3.52	0.82	848	4.11	3.37	0.82	899	3.99	3.27	0.82	919	3.85	3.16	0.82	960
30	22	4.46	3.12	0.70	879	4.31	3.01	0.70	934	4.20	2.94	0.70	960	4.03	2.82	0.70	1,000
30	24	4.69	2.72	0.58	919	4.52	2.62	0.58	970	4.41	2.56	0.58	1,000	4.27	2.48	0.58	1,050
30	26	4.83	2.22	0.46	970	4.69	2.16	0.46	1,020	4.62	2.13	0.46	1,050	4.48	2.06	0.46	1,081
31	18	4.11	4.03	0.98	808	3.94	3.86	0.98	848	3.78	3.70	0.98	889	3.64	3.57	0.98	929
31	20	4.29	3.69	0.86	848	4.11	3.54	0.86	899	3.99	3.43	0.86	919	3.85	3.31	0.86	960
31	22	4.46	3.30	0.74	879	4.31	3.19	0.74	934	4.20	3.11	0.74	960	4.03	2.98	0.74	1,000
31	24	4.69	2.91	0.62	919	4.52	2.80	0.62	970	4.41	2.73	0.62	1,000	4.27	2.65	0.62	1,050
31	26	4.83	2.42	0.50	970	4.69	2.35	0.50	1,020	4.62	2.31	0.50	1,050	4.48	2.24	0.50	1,081
32	18	4.11	4.11	1.00	808	3.94	3.94	1.00	848	3.78	3.78	1.00	889	3.64	3.64	1.00	929
32	20	4.29	3.86	0.90	848	4.11	3.70	0.90	899	3.99	3.59	0.90	919	3.85	3.47	0.90	960
32	22	4.46	3.48	0.78	879	4.31	3.36	0.78	934	4.20	3.28	0.78	960	4.03	3.14	0.78	1,000
32	24	4.69	3.10	0.66	919	4.52	2.98	0.66	970	4.41	2.91	0.66	1,000	4.27	2.82	0.66	1,050
32	26	4.83	2.61	0.54	970	4.69	2.53	0.54	1,020	4.62	2.49	0.54	1,050	4.48	2.42	0.54	1,081

Note: Q : Total capacity (kW) SHF : Sensible heat factor D.B.: Dry-bulb temperature
SHC : Sensible heat capacity (kW) INPUT : Total power input (W) W.B.: Wet-bulb temperature

COOLING operation at Rated frequency
SEZ-M35DA SEZ-M35DAL / SUZ-KA35VA6
CAPACITY : 3.5(kW) INPUT : 1010(W) SHF : 0.76

		OUTDOOR DB(℃)											
INDOOR	INDOOR	35				40				46			
DB(℃)	WB(℃)	Q	SHC	SHF	INPUT	Q	SHC	SHF	INPUT	Q	SHC	SHF	INPUT
21	18	3.43	1.99	0.58	990	3.15	1.83	0.58	1,050	2.91	1.68	0.58	1,091
21	20	3.61	1.66	0.46	1,030	3.36	1.55	0.46	1,081	3.12	1.43	0.46	1,141
22	18	3.43	2.13	0.62	990	3.15	1.95	0.62	1,050	2.91	1.80	0.62	1,091
22	20	3.61	1.80	0.50	1,030	3.36	1.68	0.50	1,081	3.12	1.56	0.50	1,141
22	22	3.82	1.45	0.38	1,071	3.57	1.36	0.38	1,131	3.33	1.26	0.38	1,172
23	18	3.43	2.26	0.66	990	3.15	2.08	0.66	1,050	2.91	1.92	0.66	1,091
23	20	3.61	1.95	0.54	1,030	3.36	1.81	0.54	1,081	3.12	1.68	0.54	1,141
23	22	3.82	1.60	0.42	1,071	3.57	1.50	0.42	1,131	3.33	1.40	0.42	1,172
24	18	3.43	2.40	0.70	990	3.15	2.21	0.70	1,050	2.91	2.03	0.70	1,091
24	20	3.61	2.09	0.58	1,030	3.36	1.95	0.58	1,081	3.12	1.81	0.58	1,141
24	22	3.82	1.75	0.46	1,071	3.57	1.64	0.46	1,131	3.33	1.53	0.46	1,172
24	24	4.03	1.37	0.34	1,111	3.78	1.29	0.34	1,162	3.57	1.21	0.34	1,212
25	20	3.61	2.24	0.62	1,030	3.36	2.08	0.62	1,081	3.12	1.93	0.62	1,141
25	22	3.82	1.91	0.50	1,071	3.57	1.79	0.50	1,131	3.33	1.66	0.50	1,172
25	24	4.03	1.53	0.38	1,111	3.78	1.44	0.38	1,162	3.57	1.36	0.38	1,212
26	18	3.43	2.68	0.78	990	3.15	2.46	0.78	1,050	2.91	2.27	0.78	1,091
26	20	3.61	2.38	0.66	1,030	3.36	2.22	0.66	1,081	3.12	2.06	0.66	1,141
26	22	3.82	2.06	0.54	1,071	3.57	1.93	0.54	1,131	3.33	1.80	0.54	1,172
26	24	4.03	1.69	0.42	1,111	3.78	1.59	0.42	1,162	3.57	1.50	0.42	1,212
26	26	4.24	1.27	0.30	1,151	3.99	1.20	0.30	1,202	3.75	1.12	0.30	1,252
27	18	3.43	2.81	0.82	990	3.15	2.58	0.82	1,050	2.91	2.38	0.82	1,091
27	20	3.61	2.52	0.70	1,030	3.36	2.35	0.70	1,081	3.12	2.18	0.70	1,141
27	22	3.82	2.21	0.58	1,071	3.57	2.07	0.58	1,131	3.33	1.93	0.58	1,172
27	24	4.03	1.85	0.46	1,111	3.78	1.74	0.46	1,162	3.57	1.64	0.46	1,212
27	26	4.24	1.44	0.34	1,151	3.99	1.36	0.34	1,202	3.75	1.27	0.34	1,252
28	18	3.43	2.95	0.86	990	3.15	2.71	0.86	1,050	2.91	2.50	0.86	1,091
28	20	3.61	2.67	0.74	1,030	3.36	2.49	0.74	1,081	3.12	2.31	0.74	1,141
28	22	3.82	2.37	0.62	1,071	3.57	2.21	0.62	1,131	3.33	2.06	0.62	1,172
28	24	4.03	2.01	0.50	1,111	3.78	1.89	0.50	1,162	3.57	1.79	0.50	1,212
28	26	4.24	1.61	0.38	1,151	3.99	1.52	0.38	1,202	3.75	1.42	0.38	1,252
29	18	3.43	3.09	0.90	990	3.15	2.84	0.90	1,050	2.91	2.61	0.90	1,091
29	20	3.61	2.81	0.78	1,030	3.36	2.62	0.78	1,081	3.12	2.43	0.78	1,141
29	22	3.82	2.52	0.66	1,071	3.57	2.36	0.66	1,131	3.33	2.19	0.66	1,172
29	24	4.03	2.17	0.54	1,111	3.78	2.04	0.54	1,162	3.57	1.93	0.54	1,212
29	26	4.24	1.78	0.42	1,151	3.99	1.68	0.42	1,202	3.75	1.57	0.42	1,252
30	18	3.43	3.22	0.94	990	3.15	2.96	0.94	1,050	2.91	2.73	0.94	1,091
30	20	3.61	2.96	0.82	1,030	3.36	2.76	0.82	1,081	3.12	2.55	0.82	1,141
30	22	3.82	2.67	0.70	1,071	3.57	2.50	0.70	1,131	3.33	2.33	0.70	1,172
30	24	4.03	2.33	0.58	1,111	3.78	2.19	0.58	1,162	3.57	2.07	0.58	1,212
30	26	4.24	1.95	0.46	1,151	3.99	1.84	0.46	1,202	3.75	1.72	0.46	1,252
31	18	3.43	3.36	0.98	990	3.15	3.09	0.98	1,050	2.91	2.85	0.98	1,091
31	20	3.61	3.10	0.86	1,030	3.36	2.89	0.86	1,081	3.12	2.68	0.86	1,141
31	22	3.82	2.82	0.74	1,071	3.57	2.64	0.74	1,131	3.33	2.46	0.74	1,172
31	24	4.03	2.50	0.62	1,111	3.78	2.34	0.62	1,162	3.57	2.21	0.62	1,212
31	26	4.24	2.12	0.50	1,151	3.99	2.00	0.50	1,202	3.75	1.87	0.50	1,252
32	18	3.43	3.43	1.00	990	3.15	3.15	1.00	1,050	2.91	2.91	1.00	1,091
32	20	3.61	3.24	0.90	1,030	3.36	3.02	0.90	1,081	3.12	2.80	0.90	1,141
32	22	3.82	2.98	0.78	1,071	3.57	2.78	0.78	1,131	3.33	2.59	0.78	1,172
32	24	4.03	2.66	0.66	1,111	3.78	2.49	0.66	1,162	3.57	2.36	0.66	1,212
32	26	4.24	2.29	0.54	1,151	3.99	2.15	0.54	1,202	3.75	2.02	0.54	1,252

Note: Q : Total capacity (kW) SHF : Sensible heat factor D.B.: Dry-bulb temperature
SHC : Sensible heat capacity (kW) INPUT : Total power input (W) W.B.: Wet-bulb temperature

COOLING operation at Rated frequency
SEZ-M50DA SEZ-M50DAL / SUZ-KA50VA6

CAPACITY : 5.1(kW) INPUT : 1580(W) SHF : 0.76

		OUTDOOR DB(℃)															
INDOOR	INDOOR	21				25				27				30			
DB(℃)	WB(℃)	Q	SHC	SHF	INPUT	Q	SHC	SHF	INPUT	Q	SHC	SHF	INPUT	Q	SHC	SHF	INPUT
21	18	5.99	3.48	0.58	1,264	5.74	3.33	0.58	1,327	5.51	3.19	0.58	1,390	5.30	3.08	0.58	1,454
21	20	6.25	2.87	0.46	1,327	5.99	2.76	0.46	1,406	5.81	2.67	0.46	1,438	5.61	2.58	0.46	1,501
22	18	5.99	3.72	0.62	1,264	5.74	3.56	0.62	1,327	5.51	3.41	0.62	1,390	5.30	3.29	0.62	1,454
22	20	6.25	3.12	0.50	1,327	5.99	3.00	0.50	1,406	5.81	2.91	0.50	1,438	5.61	2.81	0.50	1,501
22	22	6.50	2.47	0.38	1,375	6.27	2.38	0.38	1,462	6.12	2.33	0.38	1,501	5.87	2.23	0.38	1,564
23	18	5.99	3.96	0.66	1,264	5.74	3.79	0.66	1,327	5.51	3.64	0.66	1,390	5.30	3.50	0.66	1,454
23	20	6.25	3.37	0.54	1,327	5.99	3.24	0.54	1,406	5.81	3.14	0.54	1,438	5.61	3.03	0.54	1,501
23	22	6.50	2.73	0.42	1,375	6.27	2.63	0.42	1,462	6.12	2.57	0.42	1,501	5.87	2.46	0.42	1,564
24	18	5.99	4.19	0.70	1,264	5.74	4.02	0.70	1,327	5.51	3.86	0.70	1,390	5.30	3.71	0.70	1,454
24	20	6.25	3.62	0.58	1,327	5.99	3.48	0.58	1,406	5.81	3.37	0.58	1,438	5.61	3.25	0.58	1,501
24	22	6.50	2.99	0.46	1,375	6.27	2.89	0.46	1,462	6.12	2.82	0.46	1,501	5.87	2.70	0.46	1,564
24	24	6.83	2.32	0.34	1,438	6.58	2.24	0.34	1,517	6.43	2.18	0.34	1,564	6.22	2.12	0.34	1,643
25	20	6.25	3.87	0.62	1,327	5.99	3.72	0.62	1,406	5.81	3.60	0.62	1,438	5.61	3.48	0.62	1,501
25	22	6.50	3.25	0.50	1,375	6.27	3.14	0.50	1,462	6.12	3.06	0.50	1,501	5.87	2.93	0.50	1,564
25	24	6.83	2.60	0.38	1,438	6.58	2.50	0.38	1,517	6.43	2.44	0.38	1,564	6.22	2.36	0.38	1,643
26	18	5.99	4.67	0.78	1,264	5.74	4.48	0.78	1,327	5.51	4.30	0.78	1,390	5.30	4.14	0.78	1,454
26	20	6.25	4.12	0.66	1,327	5.99	3.96	0.66	1,406	5.81	3.84	0.66	1,438	5.61	3.70	0.66	1,501
26	22	6.50	3.51	0.54	1,375	6.27	3.39	0.54	1,462	6.12	3.30	0.54	1,501	5.87	3.17	0.54	1,564
26	24	6.83	2.87	0.42	1,438	6.58	2.76	0.42	1,517	6.43	2.70	0.42	1,564	6.22	2.61	0.42	1,643
26	26	7.04	2.11	0.30	1,517	6.83	2.05	0.30	1,596	6.73	2.02	0.30	1,643	6.53	1.96	0.30	1,691
27	18	5.99	4.91	0.82	1,264	5.74	4.70	0.82	1,327	5.51	4.52	0.82	1,390	5.30	4.35	0.82	1,454
27	20	6.25	4.37	0.70	1,327	5.99	4.19	0.70	1,406	5.81	4.07	0.70	1,438	5.61	3.93	0.70	1,501
27	22	6.50	3.77	0.58	1,375	6.27	3.64	0.58	1,462	6.12	3.55	0.58	1,501	5.87	3.40	0.58	1,564
27	24	6.83	3.14	0.46	1,438	6.58	3.03	0.46	1,517	6.43	2.96	0.46	1,564	6.22	2.86	0.46	1,643
27	26	7.04	2.39	0.34	1,517	6.83	2.32	0.34	1,596	6.73	2.29	0.34	1,643	6.53	2.22	0.34	1,691
28	18	5.99	5.15	0.86	1,264	5.74	4.93	0.86	1,327	5.51	4.74	0.86	1,390	5.30	4.56	0.86	1,454
28	20	6.25	4.62	0.74	1,327	5.99	4.43	0.74	1,406	5.81	4.30	0.74	1,438	5.61	4.15	0.74	1,501
28	22	6.50	4.03	0.62	1,375	6.27	3.89	0.62	1,462	6.12	3.79	0.62	1,501	5.87	3.64	0.62	1,564
28	24	6.83	3.42	0.50	1,438	6.58	3.29	0.50	1,517	6.43	3.21	0.50	1,564	6.22	3.11	0.50	1,643
28	26	7.04	2.67	0.38	1,517	6.83	2.60	0.38	1,596	6.73	2.56	0.38	1,643	6.53	2.48	0.38	1,691
29	18	5.99	5.39	0.90	1,264	5.74	5.16	0.90	1,327	5.51	4.96	0.90	1,390	5.30	4.77	0.90	1,454
29	20	6.25	4.87	0.78	1,327	5.99	4.67	0.78	1,406	5.81	4.53	0.78	1,438	5.61	4.38	0.78	1,501
29	22	6.50	4.29	0.66	1,375	6.27	4.14	0.66	1,462	6.12	4.04	0.66	1,501	5.87	3.87	0.66	1,564
29	24	6.83	3.69	0.54	1,438	6.58	3.55	0.54	1,517	6.43	3.47	0.54	1,564	6.22	3.36	0.54	1,643
29	26	7.04	2.96	0.42	1,517	6.83	2.87	0.42	1,596	6.73	2.83	0.42	1,643	6.53	2.74	0.42	1,691
30	18	5.99	5.63	0.94	1,264	5.74	5.39	0.94	1,327	5.51	5.18	0.94	1,390	5.30	4.99	0.94	1,454
30	20	6.25	5.12	0.82	1,327	5.99	4.91	0.82	1,406	5.81	4.77	0.82	1,438	5.61	4.60	0.82	1,501
30	22	6.50	4.55	0.70	1,375	6.27	4.39	0.70	1,462	6.12	4.28	0.70	1,501	5.87	4.11	0.70	1,564
30	24	6.83	3.96	0.58	1,438	6.58	3.82	0.58	1,517	6.43	3.73	0.58	1,564	6.22	3.61	0.58	1,643
30	26	7.04	3.24	0.46	1,517	6.83	3.14	0.46	1,596	6.73	3.10	0.46	1,643	6.53	3.00	0.46	1,691
31	18	5.99	5.87	0.98	1,264	5.74	5.62	0.98	1,327	5.51	5.40	0.98	1,390	5.30	5.20	0.98	1,454
31	20	6.25	5.37	0.86	1,327	5.99	5.15	0.86	1,406	5.81	5.00	0.86	1,438	5.61	4.82	0.86	1,501
31	22	6.50	4.81	0.74	1,375	6.27	4.64	0.74	1,462	6.12	4.53	0.74	1,501	5.87	4.34	0.74	1,564
31	24	6.83	4.24	0.62	1,438	6.58	4.08	0.62	1,517	6.43	3.98	0.62	1,564	6.22	3.86	0.62	1,643
31	26	7.04	3.52	0.50	1,517	6.83	3.42	0.50	1,596	6.73	3.37	0.50	1,643	6.53	3.26	0.50	1,691
32	18	5.99	5.99	1.00	1,264	5.74	5.74	1.00	1,327	5.51	5.51	1.00	1,390	5.30	5.30	1.00	1,454
32	20	6.25	5.62	0.90	1,327	5.99	5.39	0.90	1,406	5.81	5.23	0.90	1,438	5.61	5.05	0.90	1,501
32	22	6.50	5.07	0.78	1,375	6.27	4.89	0.78	1,462	6.12	4.77	0.78	1,501	5.87	4.57	0.78	1,564
32	24	6.83	4.51	0.66	1,438	6.58	4.34	0.66	1,517	6.43	4.24	0.66	1,564	6.22	4.11	0.66	1,643
32	26	7.04	3.80	0.54	1,517	6.83	3.69	0.54	1,596	6.73	3.64	0.54	1643	6.53	3.53	0.54	1,691

Note: Q : Total capacity (kW) SHF : Sensible heat factor D.B.: Dry-bub temperature
SHC : Sensible heat capacity (kW) INPUT : Total power input (W) W.B.: Wet-bulb temperature

COOLING operation at Rated frequency
SEZ-M50DA SEZ-M50DAL / SUZ-KA50VA6
CAPACITY : 5.1(kW) INPUT : 1580(W) SHF : 0.76

		OUTDOOR DB(℃)											
INDOOR	INDOOR	35				40				46			
DB(℃)	WB(℃)	Q	SHC	SHF	INPUT	Q	SHC	SHF	INPUT	Q	SHC	SHF	INPUT
21	18	5.00	2.90	0.58	1,548	4.59	2.66	0.58	1,643	4.23	2.46	0.58	1,706
21	20	5.25	2.42	0.46	1,612	4.90	2.25	0.46	1,691	4.54	2.09	0.46	1,785
22	18	5.00	3.10	0.62	1,548	4.59	2.85	0.62	1,643	4.23	2.62	0.62	1,706
22	20	5.25	2.63	0.50	1,612	4.90	2.45	0.50	1,691	4.54	2.27	0.50	1,785
22	22	5.56	2.11	0.38	1,675	5.20	1.98	0.38	1,770	4.85	1.84	0.38	1,833
23	18	5.00	3.30	0.66	1,548	4.59	3.03	0.66	1,643	4.23	2.79	0.66	1,706
23	20	5.25	2.84	0.54	1,612	4.90	2.64	0.54	1,691	4.54	2.45	0.54	1,785
23	22	5.56	2.33	0.42	1,675	5.20	2.18	0.42	1,770	4.85	2.03	0.42	1,833
24	18	5.00	3.50	0.70	1,548	4.59	3.21	0.70	1,643	4.23	2.96	0.70	1,706
24	20	5.25	3.05	0.58	1,612	4.90	2.84	0.58	1,691	4.54	2.63	0.58	1,785
24	22	5.56	2.56	0.46	1,675	5.20	2.39	0.46	1,770	4.85	2.23	0.46	1,833
24	24	5.87	1.99	0.34	1,738	5.51	1.87	0.34	1,817	5.20	1.77	0.34	1,896
25	20	5.25	3.26	0.62	1,612	4.90	3.04	0.62	1,691	4.54	2.81	0.62	1,785
25	22	5.56	2.78	0.50	1,675	5.20	2.60	0.50	1,770	4.85	2.42	0.50	1,833
25	24	5.87	2.23	0.38	1,738	5.51	2.09	0.38	1,817	5.20	1.98	0.38	1,896
26	18	5.00	3.90	0.78	1,548	4.59	3.58	0.78	1,643	4.23	3.30	0.78	1,706
26	20	5.25	3.47	0.66	1,612	4.90	3.23	0.66	1,691	4.54	3.00	0.66	1,785
26	22	5.56	3.00	0.54	1,675	5.20	2.81	0.54	1,770	4.85	2.62	0.54	1,833
26	24	5.87	2.46	0.42	1,738	5.51	2.31	0.42	1,817	5.20	2.18	0.42	1,896
26	26	6.17	1.85	0.30	1,801	5.81	1.74	0.30	1,880	5.46	1.64	0.30	1,959
27	18	5.00	4.10	0.82	1,548	4.59	3.76	0.82	1,643	4.23	3.47	0.82	1,706
27	20	5.25	3.68	0.70	1,612	4.90	3.43	0.70	1,691	4.54	3.18	0.70	1,785
27	22	5.56	3.22	0.58	1,675	5.20	3.02	0.58	1,770	4.85	2.81	0.58	1,833
27	24	5.87	2.70	0.46	1,738	5.51	2.53	0.46	1,817	5.20	2.39	0.46	1,896
27	26	6.17	2.10	0.34	1,801	5.81	1.98	0.34	1,880	5.46	1.86	0.34	1,959
28	18	5.00	4.30	0.86	1,548	4.59	3.95	0.86	1,643	4.23	3.64	0.86	1,706
28	20	5.25	3.89	0.74	1,612	4.90	3.62	0.74	1,691	4.54	3.36	0.74	1,785
28	22	5.56	3.45	0.62	1,675	5.20	3.23	0.62	1,770	4.85	3.00	0.62	1,833
28	24	5.87	2.93	0.50	1,738	5.51	2.75	0.50	1,817	5.20	2.60	0.50	1,896
28	26	6.17	2.34	0.38	1,801	5.81	2.21	0.38	1,880	5.46	2.07	0.38	1,959
29	18	5.00	4.50	0.90	1,548	4.59	4.13	0.90	1,643	4.23	3.81	0.90	1,706
29	20	5.25	4.10	0.78	1,612	4.90	3.82	0.78	1,691	4.54	3.54	0.78	1,785
29	22	5.56	3.67	0.66	1,675	5.20	3.43	0.66	1,770	4.85	3.20	0.66	1,833
29	24	5.87	3.17	0.54	1,738	5.51	2.97	0.54	1,817	5.20	2.81	0.54	1,896
29	26	6.17	2.59	0.42	1,801	5.81	2.44	0.42	1,880	5.46	2.29	0.42	1,959
30	18	5.00	4.70	0.94	1,548	4.59	4.31	0.94	1,643	4.23	3.98	0.94	1,706
30	20	5.25	4.31	0.82	1,612	4.90	4.01	0.82	1,691	4.54	3.72	0.82	1,785
30	22	5.56	3.89	0.70	1,675	5.20	3.64	0.70	1,770	4.85	3.39	0.70	1,833
30	24	5.87	3.40	0.58	1,738	5.51	3.19	0.58	1,817	5.20	3.02	0.58	1,896
30	26	6.17	2.84	0.46	1,801	5.81	2.67	0.46	1,880	5.46	2.51	0.46	1,959
31	18	5.00	4.90	0.98	1,548	4.59	4.50	0.98	1,643	4.23	4.15	0.98	1,706
31	20	5.25	4.52	0.86	1,612	4.90	4.21	0.86	1,691	4.54	3.90	0.86	1,785
31	22	5.56	4.11	0.74	1,675	5.20	3.85	0.74	1,770	4.85	3.59	0.74	1,833
31	24	5.87	3.64	0.62	1,738	5.51	3.41	0.62	1,817	5.20	3.23	0.62	1,896
31	26	6.17	3.09	0.50	1,801	5.81	2.91	0.50	1,880	5.46	2.73	0.50	1,959
32	18	5.00	5.00	1.00	1,548	4.59	4.59	1.00	1,643	4.23	4.23	1.00	1,706
32	20	5.25	4.73	0.90	1,612	4.90	4.41	0.90	1,691	4.54	4.09	0.90	1,785
32	22	5.56	4.34	0.78	1,675	5.20	4.06	0.78	1,770	4.85	3.78	0.78	1,833
32	24	5.87	3.87	0.66	1,738	5.51	3.64	0.66	1,817	5.20	3.43	0.66	1,896
32	26	6.17	3.33	0.54	1,801	5.81	3.14	0.54	1,880	5.46	2.95	0.54	1,959

Note: Q : Total capacity (kW) SHF : Sensible heat factor D.B.: Dry-bulb temperature
SHC : Sensible heat capacity (kW) INPUT : Total power input (W) W.B.: Wet-bulb temperature

COOLING operation at Rated frequency
SEZ-M60DA SEZ-M60DAL / SUZ-KA60VA6

CAPACITY : 5.6(kW) INPUT : 1740(W) SHF : 0.79

		OUTDOOR DB(℃)															
INDOOR	INDOOR	21				25				27				30			
DB(℃)	WB(℃)	Q	SHC	SHF	INPUT	Q	SHC	SHF	INPUT	Q	SHC	SHF	INPUT	Q	SHC	SHF	INPUT
21	18	6.58	4.01	0.61	1,392	6.30	3.84	0.61	1,462	6.05	3.69	0.61	1,531	5.82	3.55	0.61	1,601
21	20	6.86	3.36	0.49	1,462	6.58	3.22	0.49	1,549	6.38	3.13	0.49	1,583	6.16	3.02	0.49	1,653
22	18	6.58	4.28	0.65	1,392	6.30	4.10	0.65	1,462	6.05	3.93	0.65	1,531	5.82	3.79	0.65	1,601
22	20	6.86	3.64	0.53	1,462	6.58	3.49	0.53	1,549	6.38	3.38	0.53	1,583	6.16	3.26	0.53	1,653
22	22	7.14	2.93	0.41	1,514	6.89	2.82	0.41	1,610	6.72	2.76	0.41	1,653	6.44	2.64	0.41	1,723
23	18	6.58	4.54	0.69	1,392	6.30	4.35	0.69	1,462	6.05	4.17	0.69	1,531	5.82	4.02	0.69	1,601
23	20	6.86	3.91	0.57	1,462	6.58	3.75	0.57	1,549	6.38	3.64	0.57	1,583	6.16	3.51	0.57	1,653
23	22	7.14	3.21	0.45	1,514	6.89	3.10	0.45	1,610	6.72	3.02	0.45	1,653	6.44	2.90	0.45	1,723
24	18	6.58	4.80	0.73	1,392	6.30	4.60	0.73	1,462	6.05	4.42	0.73	1,531	5.82	4.25	0.73	1,601
24	20	6.86	4.18	0.61	1,462	6.58	4.01	0.61	1,549	6.38	3.89	0.61	1,583	6.16	3.76	0.61	1,653
24	22	7.14	3.50	0.49	1,514	6.89	3.38	0.49	1,610	6.72	3.29	0.49	1,653	6.44	3.16	0.49	1,723
24	24	7.50	2.78	0.37	1,583	7.22	2.67	0.37	1,670	7.06	2.61	0.37	1,723	6.83	2.53	0.37	1,810
25	20	6.86	4.46	0.65	1,462	6.58	4.28	0.65	1,549	6.38	4.15	0.65	1,583	6.16	4.00	0.65	1,653
25	22	7.14	3.78	0.53	1,514	6.89	3.65	0.53	1,610	6.72	3.56	0.53	1,653	6.44	3.41	0.53	1,723
25	24	7.50	3.08	0.41	1,583	7.22	2.96	0.41	1,670	7.06	2.89	0.41	1,723	6.83	2.80	0.41	1,810
26	18	6.58	5.33	0.81	1,392	6.30	5.10	0.81	1,462	6.05	4.90	0.81	1,531	5.82	4.72	0.81	1,601
26	20	6.86	4.73	0.69	1,462	6.58	4.54	0.69	1,549	6.38	4.40	0.69	1,583	6.16	4.25	0.69	1,653
26	22	7.14	4.07	0.57	1,514	6.89	3.93	0.57	1,610	6.72	3.83	0.57	1,653	6.44	3.67	0.57	1,723
26	24	7.50	3.38	0.45	1,583	7.22	3.25	0.45	1,670	7.06	3.18	0.45	1,723	6.83	3.07	0.45	1,810
26	26	7.73	2.55	0.33	1,670	7.50	2.48	0.33	1,757	7.39	2.44	0.33	1,810	7.17	2.37	0.33	1,862
27	18	6.58	5.59	0.85	1,392	6.30	5.36	0.85	1,462	6.05	5.14	0.85	1,531	5.82	4.95	0.85	1,601
27	20	6.86	5.01	0.73	1,462	6.58	4.80	0.73	1,549	6.38	4.66	0.73	1,583	6.16	4.50	0.73	1,653
27	22	7.14	4.36	0.61	1,514	6.89	4.20	0.61	1,610	6.72	4.10	0.61	1,653	6.44	3.93	0.61	1,723
27	24	7.50	3.68	0.49	1,583	7.22	3.54	0.49	1,670	7.06	3.46	0.49	1,723	6.83	3.35	0.49	1,810
27	26	7.73	2.86	0.37	1,670	7.50	2.78	0.37	1,757	7.39	2.74	0.37	1,810	7.17	2.65	0.37	1,862
28	18	6.58	5.86	0.89	1,392	6.30	5.61	0.89	1,462	6.05	5.38	0.89	1,531	5.82	5.18	0.89	1,601
28	20	6.86	5.28	0.77	1,462	6.58	5.07	0.77	1,549	6.38	4.92	0.77	1,583	6.16	4.74	0.77	1,653
28	22	7.14	4.64	0.65	1,514	6.89	4.48	0.65	1,610	6.72	4.37	0.65	1,653	6.44	4.19	0.65	1,723
28	24	7.50	3.98	0.53	1,583	7.22	3.83	0.53	1,670	7.06	3.74	0.53	1,723	6.83	3.62	0.53	1,810
28	26	7.73	3.17	0.41	1,670	7.50	3.08	0.41	1,757	7.39	3.03	0.41	1,810	7.17	2.94	0.41	1,862
29	18	6.58	6.12	0.93	1,392	6.30	5.86	0.93	1,462	6.05	5.62	0.93	1,531	5.82	5.42	0.93	1,601
29	20	6.86	5.56	0.81	1,462	6.58	5.33	0.81	1,549	6.38	5.17	0.81	1,583	6.16	4.99	0.81	1,653
29	22	7.14	4.93	0.69	1,514	6.89	4.75	0.69	1,610	6.72	4.64	0.69	1,653	6.44	4.44	0.69	1,723
29	24	7.50	4.28	0.57	1,583	7.22	4.12	0.57	1,670	7.06	4.02	0.57	1,723	6.83	3.89	0.57	1,810
29	26	7.73	3.48	0.45	1,670	7.50	3.38	0.45	1,757	7.39	3.33	0.45	1,810	7.17	3.23	0.45	1,862
30	18	6.58	6.38	0.97	1,392	6.30	6.11	0.97	1,462	6.05	5.87	0.97	1,531	5.82	5.65	0.97	1,601
30	20	6.86	5.83	0.85	1,462	6.58	5.59	0.85	1,549	6.38	5.43	0.85	1,583	6.16	5.24	0.85	1,653
30	22	7.14	5.21	0.73	1,514	6.89	5.03	0.73	1,610	6.72	4.91	0.73	1,653	6.44	4.70	0.73	1,723
30	24	7.50	4.58	0.61	1,583	7.22	4.41	0.61	1,670	7.06	4.30	0.61	1,723	6.83	4.17	0.61	1,810
30	26	7.73	3.79	0.49	1,670	7.50	3.68	0.49	1,757	7.39	3.62	0.49	1,810	7.17	3.51	0.49	1,862
31	18	6.58	6.58	1.00	1,392	6.30	6.30	1.00	1,462	6.05	6.05	1.00	1,531	5.82	5.82	1.00	1,601
31	20	6.86	6.11	0.89	1,462	6.58	5.86	0.89	1,549	6.38	5.68	0.89	1,583	6.16	5.48	0.89	1,653
31	22	7.14	5.50	0.77	1,514	6.89	5.30	0.77	1,610	6.72	5.17	0.77	1,653	6.44	4.96	0.77	1,723
31	24	7.50	4.88	0.65	1,583	7.22	4.70	0.65	1,670	7.06	4.59	0.65	1,723	6.83	4.44	0.65	1,810
31	26	7.73	4.10	0.53	1,670	7.50	3.98	0.53	1,757	7.39	3.92	0.53	1,810	7.17	3.80	0.53	1,862
32	18	6.58	6.58	1.00	1,392	6.30	6.30	1.00	1,462	6.05	6.05	1.00	1,531	5.82	5.82	1.00	1,601
32	20	6.86	6.38	0.93	1,462	6.58	6.12	0.93	1,549	6.38	5.94	0.93	1,583	6.16	5.73	0.93	1,653
32	22	7.14	5.78	0.81	1,514	6.89	5.58	0.81	1,610	6.72	5.44	0.81	1,653	6.44	5.22	0.81	1,723
32	24	7.50	5.18	0.69	1,583	7.22	4.98	0.69	1,670	7.06	4.87	0.69	1,723	6.83	4.71	0.69	1,810
32	26	7.73	4.40	0.57	1,670	7.50	4.28	0.57	1,757	7.39	4.21	0.57	1,810	7.17	4.09	0.57	1,862

Note: Q : Total capacity (kW) SHF : Sensible heat factor D.B.: Dry-bulb temperature
SHC : Sensible heat capacity (kW) INPUT : Total power input (W) W.B.: Wet-bulb temperature

COOLING operation at Rated frequency
SEZ-M60DA SEZ-M60DAL / SUZ-KA60VA6
CAPACITY : 5.6(kW) INPUT : 1740(W) SHF : 0.79

		OUTDOOR DB(℃)											
INDOOR	INDOOR	35				40				46			
DB(℃)	WB(℃)	Q	SHC	SHF	INPUT	Q	SHC	SHF	INPUT	Q	SHC	SHF	INPUT
21	18	5.49	3.35	0.61	1,705	5.04	3.07	0.61	1,810	4.65	2.84	0.61	1,879
21	20	5.77	2.83	0.49	1,775	5.38	2.63	0.49	1,862	4.98	2.44	0.49	1,966
22	18	5.49	3.57	0.65	1,705	5.04	3.28	0.65	1,810	4.65	3.02	0.65	1,879
22	20	5.77	3.06	0.53	1,775	5.38	2.85	0.53	1,862	4.98	2.64	0.53	1,966
22	22	6.10	2.50	0.41	1,844	5.71	2.34	0.41	1,949	5.32	2.18	0.41	2,018
23	18	5.49	3.79	0.69	1,705	5.04	3.48	0.69	1,810	4.65	3.21	0.69	1,879
23	20	5.77	3.29	0.57	1,775	5.38	3.06	0.57	1,862	4.98	2.84	0.57	1,966
23	22	6.10	2.75	0.45	1,844	5.71	2.57	0.45	1,949	5.32	2.39	0.45	2,018
24	18	5.49	4.01	0.73	1,705	5.04	3.68	0.73	1,810	4.65	3.39	0.73	1,879
24	20	5.77	3.52	0.61	1,775	5.38	3.28	0.61	1,862	4.98	3.04	0.61	1,966
24	22	6.10	2.99	0.49	1,844	5.71	2.80	0.49	1,949	5.32	2.61	0.49	2,018
24	24	6.44	2.38	0.37	1,914	6.05	2.24	0.37	2,001	5.71	2.11	0.37	2,088
25	20	5.77	3.75	0.65	1,775	5.38	3.49	0.65	1,862	4.98	3.24	0.65	1,966
25	22	6.10	3.24	0.53	1,844	5.71	3.03	0.53	1,949	5.32	2.82	0.53	2,018
25	24	6.44	2.64	0.41	1,914	6.05	2.48	0.41	2,001	5.71	2.34	0.41	2,088
26	18	5.49	4.45	0.81	1,705	5.04	4.08	0.81	1,810	4.65	3.76	0.81	1,879
26	20	5.77	3.98	0.69	1,775	5.38	3.71	0.69	1,862	4.98	3.44	0.69	1,966
26	22	6.10	3.48	0.57	1,844	5.71	3.26	0.57	1,949	5.32	3.03	0.57	2,018
26	24	6.44	2.90	0.45	1,914	6.05	2.72	0.45	2,001	5.71	2.57	0.45	2,088
26	26	6.78	2.24	0.33	1,984	6.38	2.11	0.33	2,071	5.99	1.98	0.33	2,158
27	18	5.49	4.66	0.85	1,705	5.04	4.28	0.85	1,810	4.65	3.95	0.85	1,879
27	20	5.77	4.21	0.73	1,775	5.38	3.92	0.73	1,862	4.98	3.64	0.73	1,966
27	22	6.10	3.72	0.61	1,844	5.71	3.48	0.61	1,949	5.32	3.25	0.61	2,018
27	24	6.44	3.16	0.49	1,914	6.05	2.96	0.49	2,001	5.71	2.80	0.49	2,088
27	26	6.78	2.51	0.37	1,984	6.38	2.36	0.37	2,071	5.99	2.22	0.37	2,158
28	18	5.49	4.88	0.89	1,705	5.04	4.49	0.89	1,810	4.65	4.14	0.89	1,879
28	20	5.77	4.44	0.77	1,775	5.38	4.14	0.77	1,862	4.98	3.84	0.77	1,966
28	22	6.10	3.97	0.65	1,844	5.71	3.71	0.65	1,949	5.32	3.46	0.65	2,018
28	24	6.44	3.41	0.53	1,914	6.05	3.21	0.53	2,001	5.71	3.03	0.53	2,088
28	26	6.78	2.78	0.41	1,984	6.38	2.62	0.41	2,071	5.99	2.46	0.41	2,158
29	18	5.49	5.10	0.93	1,705	5.04	4.69	0.93	1,810	4.65	4.32	0.93	1,879
29	20	5.77	4.67	0.81	1,775	5.38	4.35	0.81	1,862	4.98	4.04	0.81	1,966
29	22	6.10	4.21	0.69	1,844	5.71	3.94	0.69	1,949	5.32	3.67	0.69	2,018
29	24	6.44	3.67	0.57	1,914	6.05	3.45	0.57	2,001	5.71	3.26	0.57	2,088
29	26	6.78	3.05	0.45	1,984	6.38	2.87	0.45	2,071	5.99	2.70	0.45	2,158
30	18	5.49	5.32	0.97	1,705	5.04	4.89	0.97	1,810	4.65	4.51	0.97	1,879
30	20	5.77	4.90	0.85	1,775	5.38	4.57	0.85	1,862	4.98	4.24	0.85	1,966
30	22	6.10	4.46	0.73	1,844	5.71	4.17	0.73	1,949	5.32	3.88	0.73	2,018
30	24	6.44	3.93	0.61	1,914	6.05	3.69	0.61	2,001	5.71	3.48	0.61	2,088
30	26	6.78	3.32	0.49	1,984	6.38	3.13	0.49	2,071	5.99	2.94	0.49	2,158
31	18	5.49	5.49	1.00	1,705	5.04	5.04	1.00	1,810	4.65	4.65	1.00	1,879
31	20	5.77	5.13	0.89	1,775	5.38	4.78	0.89	1,862	4.98	4.44	0.89	1,966
31	22	6.10	4.70	0.77	1,844	5.71	4.40	0.77	1,949	5.32	4.10	0.77	2,018
31	24	6.44	4.19	0.65	1,914	6.05	3.93	0.65	2,001	5.71	3.71	0.65	2,088
31	26	6.78	3.59	0.53	1,984	6.38	3.38	0.53	2,071	5.99	3.18	0.53	2,158
32	18	5.49	5.49	1.00	1,705	5.04	5.04	1.00	1,810	4.65	4.65	1.00	1,879
32	20	5.77	5.36	0.93	1,775	5.38	5.00	0.93	1,862	4.98	4.64	0.93	1,966
32	22	6.10	4.94	0.81	1,844	5.71	4.63	0.81	1,949	5.32	4.31	0.81	2,018
32	24	6.44	4.44	0.69	1,914	6.05	4.17	0.69	2,001	5.71	3.94	0.69	2,088
32	26	6.78	3.86	0.57	1,984	6.38	3.64	0.57	2,071	5.99	3.42	0.57	2,158

Note: Q : Total capacity (kW)
SHC : Sensible heat capacity (kW)
SHF : Sensible heat factor
INPUT : Total power input (W)
D.B.: Dry-bulb temperature
W.B.: Wet-bulb temperature

COOLING operation at Rated frequency
SEZ-M71DA SEZ-M71DAL / SUZ-KA71VA6

CAPACITY : 7.1(kW) INPUT : 2210(W) SHF : 0.74

		OUTDOOR DB(℃)															
INDOOR	INDOOR	21				25				27				30			
DB(℃)	WB(℃)	Q	SHC	SHF	INPUT	Q	SHC	SHF	INPUT	Q	SHC	SHF	INPUT	Q	SHC	SHF	INPUT
21	18	8.34	4.67	0.56	1,768	7.99	4.47	0.56	1,856	7.67	4.29	0.56	1,945	7.38	4.14	0.56	2,033
21	20	8.70	3.83	0.44	1,856	8.34	3.67	0.44	1,967	8.09	3.56	0.44	2,011	7.81	3.44	0.44	2,100
22	18	8.34	5.01	0.60	1,768	7.99	4.79	0.60	1,856	7.67	4.60	0.60	1,945	7.38	4.43	0.60	2,033
22	20	8.70	4.17	0.48	1,856	8.34	4.00	0.48	1,967	8.09	3.89	0.48	2,011	7.81	3.75	0.48	2,100
22	22	9.05	3.26	0.36	1,923	8.73	3.14	0.36	2,044	8.52	3.07	0.36	2,100	8.17	2.94	0.36	2,188
23	18	8.34	5.34	0.64	1,768	7.99	5.11	0.64	1,856	7.67	4.91	0.64	1,945	7.38	4.73	0.64	2,033
23	20	8.70	4.52	0.52	1,856	8.34	4.34	0.52	1,967	8.09	4.21	0.52	2,011	7.81	4.06	0.52	2,100
23	22	9.05	3.62	0.40	1,923	8.73	3.49	0.40	2,044	8.52	3.41	0.40	2,100	8.17	3.27	0.40	2,188
24	18	8.34	5.67	0.68	1,768	7.99	5.43	0.68	1,856	7.67	5.21	0.68	1,945	7.38	5.02	0.68	2,033
24	20	8.70	4.87	0.56	1,856	8.34	4.67	0.56	1,967	8.09	4.53	0.56	2,011	7.81	4.37	0.56	2,100
24	22	9.05	3.98	0.44	1,923	8.73	3.84	0.44	2,044	8.52	3.75	0.44	2,100	8.17	3.59	0.44	2,188
24	24	9.51	3.04	0.32	2,011	9.16	2.93	0.32	2,122	8.95	2.86	0.32	2,188	8.66	2.77	0.32	2,298
25	20	8.70	5.22	0.60	1,856	8.34	5.01	0.60	1,967	8.09	4.86	0.60	2,011	7.81	4.69	0.60	2,100
25	22	9.05	4.35	0.48	1,923	8.73	4.19	0.48	2,044	8.52	4.09	0.48	2,100	8.17	3.92	0.48	2,188
25	24	9.51	3.43	0.36	2,011	9.16	3.30	0.36	2,122	8.95	3.22	0.36	2,188	8.66	3.12	0.36	2,298
26	18	8.34	6.34	0.76	1,768	7.99	6.07	0.76	1,856	7.67	5.83	0.76	1,945	7.38	5.61	0.76	2,033
26	20	8.70	5.57	0.64	1,856	8.34	5.34	0.64	1,967	8.09	5.18	0.64	2,011	7.81	5.00	0.64	2,100
26	22	9.05	4.71	0.52	1,923	8.73	4.54	0.52	2,044	8.52	4.43	0.52	2,100	8.17	4.25	0.52	2,188
26	24	9.51	3.81	0.40	2,011	9.16	3.66	0.40	2,122	8.95	3.58	0.40	2,188	8.66	3.46	0.40	2,298
26	26	9.80	2.74	0.28	2,122	9.51	2.66	0.28	2,232	9.37	2.62	0.28	2,298	9.09	2.54	0.28	2,365
27	18	8.34	6.67	0.80	1,768	7.99	6.39	0.80	1,856	7.67	6.13	0.80	1,945	7.38	5.91	0.80	2,033
27	20	8.70	5.91	0.68	1,856	8.34	5.67	0.68	1,967	8.09	5.50	0.68	2,011	7.81	5.31	0.68	2,100
27	22	9.05	5.07	0.56	1,923	8.73	4.89	0.56	2,044	8.52	4.77	0.56	2,100	8.17	4.57	0.56	2,188
27	24	9.51	4.19	0.44	2,011	9.16	4.03	0.44	2,122	8.95	3.94	0.44	2,188	8.66	3.81	0.44	2,298
27	26	9.80	3.14	0.32	2,122	9.51	3.04	0.32	2,232	9.37	3.00	0.32	2,298	9.09	2.91	0.32	2,365
28	18	8.34	7.01	0.84	1,768	7.99	6.71	0.84	1,856	7.67	6.44	0.84	1,945	7.38	6.20	0.84	2,033
28	20	8.70	6.26	0.72	1,856	8.34	6.01	0.72	1,967	8.09	5.83	0.72	2,011	7.81	5.62	0.72	2,100
28	22	9.05	5.43	0.60	1,923	8.73	5.24	0.60	2,044	8.52	5.11	0.60	2,100	8.17	4.90	0.60	2,188
28	24	9.51	4.57	0.48	2,011	9.16	4.40	0.48	2,122	8.95	4.29	0.48	2,188	8.66	4.16	0.48	2,298
28	26	9.80	3.53	0.36	2,122	9.51	3.43	0.36	2,232	9.37	3.37	0.36	2,298	9.09	3.27	0.36	2,365
29	18	8.34	7.34	0.88	1,768	7.99	7.03	0.88	1,856	7.67	6.75	0.88	1,945	7.38	6.50	0.88	2,033
29	20	8.70	6.61	0.76	1,856	8.34	6.34	0.76	1,967	8.09	6.15	0.76	2,011	7.81	5.94	0.76	2,100
29	22	9.05	5.79	0.64	1,923	8.73	5.59	0.64	2,044	8.52	5.45	0.64	2,100	8.17	5.23	0.64	2,188
29	24	9.51	4.95	0.52	2,011	9.16	4.76	0.52	2,122	8.95	4.65	0.52	2,188	8.66	4.50	0.52	2,298
29	26	9.80	3.92	0.40	2,122	9.51	3.81	0.40	2,232	9.37	3.75	0.40	2,298	9.09	3.64	0.40	2,365
30	18	8.34	7.68	0.92	1,768	7.99	7.35	0.92	1,856	7.67	7.05	0.92	1,945	7.38	6.79	0.92	2,033
30	20	8.70	6.96	0.80	1,856	8.34	6.67	0.80	1,967	8.09	6.48	0.80	2,011	7.81	6.25	0.80	2,100
30	22	9.05	6.16	0.68	1,923	8.73	5.94	0.68	2,044	8.52	5.79	0.68	2,100	8.17	5.55	0.68	2,188
30	24	9.51	5.33	0.56	2,011	9.16	5.13	0.56	2,122	8.95	5.01	0.56	2,188	8.66	4.85	0.56	2,298
30	26	9.80	4.31	0.44	2,122	9.51	4.19	0.44	2,232	9.37	4.12	0.44	2,298	9.09	4.00	0.44	2,365
31	18	8.34	8.01	0.96	1,768	7.99	7.67	0.96	1,856	7.67	7.36	0.96	1,945	7.38	7.09	0.96	2,033
31	20	8.70	7.31	0.84	1,856	8.34	7.01	0.84	1,967	8.09	6.80	0.84	2,011	7.81	6.56	0.84	2,100
31	22	9.05	6.52	0.72	1,923	8.73	6.29	0.72	2,044	8.52	6.13	0.72	2,100	8.17	5.88	0.72	2,188
31	24	9.51	5.71	0.60	2,011	9.16	5.50	0.60	2,122	8.95	5.37	0.60	2,188	8.66	5.20	0.60	2,298
31	26	9.80	4.70	0.48	2,122	9.51	4.57	0.48	2,232	9.37	4.50	0.48	2,298	9.09	4.36	0.48	2,365
32	18	8.34	8.34	1.00	1,768	7.99	7.99	1.00	1,856	7.67	7.67	1.00	1,945	7.38	7.38	1.00	2,033
32	20	8.70	7.65	0.88	1,856	8.34	7.34	0.88	1,967	8.09	7.12	0.88	2,011	7.81	6.87	0.88	2,100
32	22	9.05	6.88	0.76	1,923	8.73	6.64	0.76	2,044	8.52	6.48	0.76	2,100	8.17	6.21	0.76	2,188
32	24	9.51	6.09	0.64	2,011	9.16	5.86	0.64	2,122	8.95	5.73	0.64	2,188	8.66	5.54	0.64	2,298
32	26	9.80	5.09	0.52	2,122	9.51	4.95	0.52	2,232	9.37	4.87	0.52	2,298	9.09	4.73	0.52	2,365

Note: Q : Total capacity (kW) SHF : Sensible heat factor D.B.: Dry-bulb temperature
SHC : Sensible heat capacity (kW) INPUT : Total power input (W) W.B.: Wet-bulb temperature

COOLING operation at Rated frequency
SEZ-M71DA SEZ-M71DAL / SUZ-KA71VA6
CAPACITY : 7.1(kW) INPUT : 2210(W) SHF : 0.74

		OUTDOOR DB(℃)											
INDOOR	INDOOR	35				40				46			
DB(℃)	WB(℃)	Q	SHC	SHF	INPUT	Q	SHC	SHF	INPUT	Q	SHC	SHF	INPUT
21	18	6.96	3.90	0.56	2,166	6.39	3.58	0.56	2,298	5.89	3.30	0.56	2,387
21	20	7.31	3.22	0.44	2,254	6.82	3.00	0.44	2,365	6.32	2.78	0.44	2,497
22	18	6.96	4.17	0.60	2,166	6.39	3.83	0.60	2,298	5.89	3.54	0.60	2,387
22	20	7.31	3.51	0.48	2,254	6.82	3.27	0.48	2,365	6.32	3.03	0.48	2,497
22	22	7.74	2.79	0.36	2,343	7.24	2.61	0.36	2,475	6.75	2.43	0.36	2,564
23	18	6.96	4.45	0.64	2,166	6.39	4.09	0.64	2,298	5.89	3.77	0.64	2,387
23	20	7.31	3.80	0.52	2,254	6.82	3.54	0.52	2,365	6.32	3.29	0.52	2,497
23	22	7.74	3.10	0.40	2,343	7.24	2.90	0.40	2,475	6.75	2.70	0.40	2,564
24	18	6.96	4.73	0.68	2,166	6.39	4.35	0.68	2,298	5.89	4.01	0.68	2,387
24	20	7.31	4.10	0.56	2,254	6.82	3.82	0.56	2,365	6.32	3.54	0.56	2,497
24	22	7.74	3.41	0.44	2,343	7.24	3.19	0.44	2,475	6.75	2.97	0.44	2,564
24	24	8.17	2.61	0.32	2,431	7.67	2.45	0.32	2,542	7.24	2.32	0.32	2,652
25	20	7.31	4.39	0.60	2,254	6.82	4.09	0.60	2,365	6.32	3.79	0.60	2,497
25	22	7.74	3.71	0.48	2,343	7.24	3.48	0.48	2,475	6.75	3.24	0.48	2,564
25	24	8.17	2.94	0.36	2,431	7.67	2.76	0.36	2,542	7.24	2.61	0.36	2,652
26	18	6.96	5.29	0.76	2,166	6.39	4.86	0.76	2,298	5.89	4.48	0.76	2,387
26	20	7.31	4.68	0.64	2,254	6.82	4.36	0.64	2,365	6.32	4.04	0.64	2,497
26	22	7.74	4.02	0.52	2,343	7.24	3.77	0.52	2,475	6.75	3.51	0.52	2,564
26	24	8.17	3.27	0.40	2,431	7.67	3.07	0.40	2,542	7.24	2.90	0.40	2,652
26	26	8.59	2.41	0.28	2,519	8.09	2.27	0.28	2,630	7.60	2.13	0.28	2,740
27	18	6.96	5.57	0.80	2,166	6.39	5.11	0.80	2,298	5.89	4.71	0.80	2,387
27	20	7.31	4.97	0.68	2,254	6.82	4.63	0.68	2,365	6.32	4.30	0.68	2,497
27	22	7.74	4.33	0.56	2,343	7.24	4.06	0.56	2,475	6.75	3.78	0.56	2,564
27	24	8.17	3.59	0.44	2,431	7.67	3.37	0.44	2,542	7.24	3.19	0.44	2,652
27	26	8.59	2.75	0.32	2,519	8.09	2.59	0.32	2,630	7.60	2.43	0.32	2,740
28	18	6.96	5.84	0.84	2,166	6.39	5.37	0.84	2,298	5.89	4.95	0.84	2,387
28	20	7.31	5.27	0.72	2,254	6.82	4.91	0.72	2,365	6.32	4.55	0.72	2,497
28	22	7.74	4.64	0.60	2,343	7.24	4.35	0.60	2,475	6.75	4.05	0.60	2,564
28	24	8.17	3.92	0.48	2,431	7.67	3.68	0.48	2,542	7.24	3.48	0.48	2,652
28	26	8.59	3.09	0.36	2,519	8.09	2.91	0.36	2,630	7.60	2.73	0.36	2,740
29	18	6.96	6.12	0.88	2,166	6.39	5.62	0.88	2,298	5.89	5.19	0.88	2,387
29	20	7.31	5.56	0.76	2,254	6.82	5.18	0.76	2,365	6.32	4.80	0.76	2,497
29	22	7.74	4.95	0.64	2,343	7.24	4.63	0.64	2,475	6.75	4.32	0.64	2,564
29	24	8.17	4.25	0.52	2,431	7.67	3.99	0.52	2,542	7.24	3.77	0.52	2,652
29	26	8.59	3.44	0.40	2,519	8.09	3.24	0.40	2,630	7.60	3.04	0.40	2,740
30	18	6.96	6.40	0.92	2,166	6.39	5.88	0.92	2,298	5.89	5.42	0.92	2,387
30	20	7.31	5.85	0.80	2,254	6.82	5.45	0.80	2,365	6.32	5.06	0.80	2,497
30	22	7.74	5.26	0.68	2,343	7.24	4.92	0.68	2,475	6.75	4.59	0.68	2,564
30	24	8.17	4.57	0.56	2,431	7.67	4.29	0.56	2,542	7.24	4.06	0.56	2,652
30	26	8.59	3.78	0.44	2,519	8.09	3.56	0.44	2,630	7.60	3.34	0.44	2,740
31	18	6.96	6.68	0.96	2,166	6.39	6.13	0.96	2,298	5.89	5.66	0.96	2,387
31	20	7.31	6.14	0.84	2,254	6.82	5.73	0.84	2,365	6.32	5.31	0.84	2,497
31	22	7.74	5.57	0.72	2,343	7.24	5.21	0.72	2,475	6.75	4.86	0.72	2,564
31	24	8.17	4.90	0.60	2,431	7.67	4.60	0.60	2,542	7.24	4.35	0.60	2,652
31	26	8.59	4.12	0.48	2,519	8.09	3.89	0.48	2,630	7.60	3.65	0.48	2,740
32	18	6.96	6.96	1.00	2,166	6.39	6.39	1.00	2,298	5.89	5.89	1.00	2,387
32	20	7.31	6.44	0.88	2,254	6.82	6.00	0.88	2,365	6.32	5.56	0.88	2,497
32	22	7.74	5.88	0.76	2,343	7.24	5.50	0.76	2,475	6.75	5.13	0.76	2,564
32	24	8.17	5.23	0.64	2,431	7.67	4.91	0.64	2,542	7.24	4.63	0.64	2,652
32	26	8.59	4.47	0.52	2,519	8.09	4.21	0.52	2,630	7.60	3.95	0.52	2,740

Note: Q : Total capacity (kW) SHF : Sensible heat factor D.B.: Dry-bulb temperature
SHC : Sensible heat capacity (kW) INPUT : Total power input (W) W.B.: Wet-bulb temperature

HEATING operation

SEZ-M25DA SEZ-M25DAL / SUZ-M25VA at Rated frequency

CAPACITY : 2.9(kW) INPUT : 803(W)

	OUTDOOR WB(℃)															
INDOOR	-15		-10		-5		0		5		10		15		20	
DB(℃)	Q	INPUT	Q	INPUT	Q	INPUT	Q	INPUT	Q	INPUT	Q	INPUT	Q	INPUT	Q	INPUT
15	1.45	418	1.83	522	2.20	626	2.58	707	2.96	763	3.34	811	3.68	835	4.06	851
21	1.36	445	1.74	562	2.09	666	2.47	739	2.81	795	3.19	835	3.54	859	3.90	891
26	1.19	482	1.57	602	1.94	707	2.29	779	2.67	835	3.05	875	3.39	899	3.77	923

SEZ-M35DA SEZ-M35DAL / SUZ-M35VA at Rated frequency

CAPACITY : 4.2(kW) INPUT : 1130(W)

	OUTDOOR WB(℃)															
INDOOR	-15		-10		-5		0		5		10		15		20	
DB(℃)	Q	INPUT	Q	INPUT	Q	INPUT	Q	INPUT	Q	INPUT	Q	INPUT	Q	INPUT	Q	INPUT
15	2.10	588	2.65	735	3.19	881	3.74	994	4.28	1,074	4.83	1,141	5.33	1,175	5.88	1,198
21	1.97	626	2.52	791	3.02	938	3.57	1,040	4.07	1,119	4.62	1,175	5.12	1,209	5.65	1,254
26	1.72	678	2.27	848	2.81	994	3.32	1,096	3.86	1,175	4.41	1,232	4.91	1,266	5.46	1,300

SEZ-M50DA SEZ-M50DAL / SUZ-M50VA at Rated frequency

CAPACITY : 6.4(kW) INPUT : 1800(W)

	OUTDOOR WB(℃)															
INDOOR	-15		-10		-5		0		5		10		15		20	
DB(℃)	Q	INPUT	Q	INPUT	Q	INPUT	Q	INPUT	Q	INPUT	Q	INPUT	Q	INPUT	Q	INPUT
15	3.20	936	4.03	1,170	4.86	1,404	5.70	1,584	6.53	1,710	7.36	1,818	8.13	1,872	8.96	1,908
21	3.01	997	3.84	1,260	4.61	1,494	5.44	1,656	6.21	1,782	7.04	1,872	7.81	1,926	8.61	1,998
26	2.62	1,080	3.46	1,350	4.29	1,584	5.06	1,746	5.89	1,872	6.72	1,962	7.49	2,016	8.32	2,070

SEZ-M60DA, SEZ-M60DAL / SUZ-M60VA at Rated frequency

CAPACITY : 7.4(kW) INPUT : 2200(W)

	OUTDOOR WB(℃)															
INDOOR	-15		-10		-5		0		5		10		15		20	
DB(℃)	Q	INPUT	Q	INPUT	Q	INPUT	Q	INPUT	Q	INPUT	Q	INPUT	Q	INPUT	Q	INPUT
15	3.70	1,177	4.66	1,430	5.62	1,716	6.59	1,936	7.55	2,090	8.51	2,222	9.40	2,288	10.36	2,332
21	3.48	1,254	4.44	1,540	5.33	1,826	6.29	2,024	7.18	2,178	8.14	2,288	9.03	2,354	9.95	2,442
26	3.03	1,357	4.00	1,650	4.96	1,936	5.85	2,134	6.81	2,288	7.77	2,398	8.66	2,464	9.62	2,530

SEZ-M71DA, SEZ-M71DAL / SUZ-M71VA at Rated frequency

CAPACITY : 8.1(kW) INPUT : 2268(W)

	OUTDOOR WB(℃)															
INDOOR	-15		-10		-5		0		5		10		15		20	
DB(℃)	Q	INPUT	Q	INPUT	Q	INPUT	Q	INPUT	Q	INPUT	Q	INPUT	Q	INPUT	Q	INPUT
15	4.05	1,213	5.10	1,474	6.16	1,769	7.21	1,996	8.26	2,155	9.32	2,291	10.29	2,359	11.34	2,404
21	3.81	1,293	4.86	1,588	5.83	1,882	6.89	2,087	7.86	2,245	8.91	2,359	9.88	2,427	10.89	2,517
26	3.32	1,399	4.37	1,701	5.43	1,996	6.40	2,200	7.45	2,359	8.51	2,472	9.48	2,540	10.53	2,608

Note: Q : Total capacity (kW) INPUT : Total power input (W) D.B.: Dry-bulb temperature W.B.: Wet-bulb temperature

B.2.6 NOISE CRITERIA CURVES

NOTE: The sound level is measured in an anechoic room where echoes are few, when compressor stops. The sound may be bigger than the indicated level in actual use due to surrounding echoes. The sound level can be higher by about 2 dB than the indicated level during cooling and heating operation.

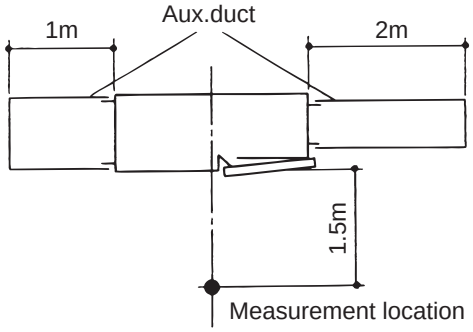

SEZ-M25DA
SEZ-M25DAL

External static pressure: 5Pa

NOTCH	SPL(dB)	LINE
High	29	
Middle	25	
Low	22	

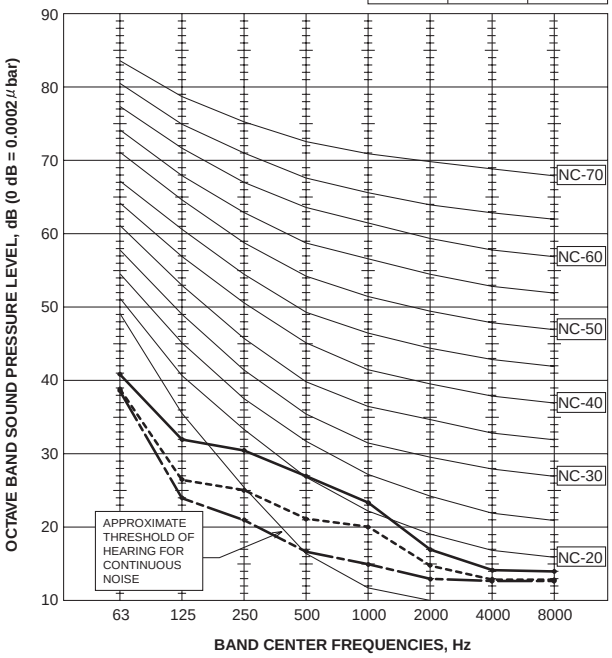

SEZ-M25DA
SEZ-M25DAL

External static pressure: 15Pa

NOTCH	SPL(dB)	LINE
High	30	
Middle	26	
Low	23	

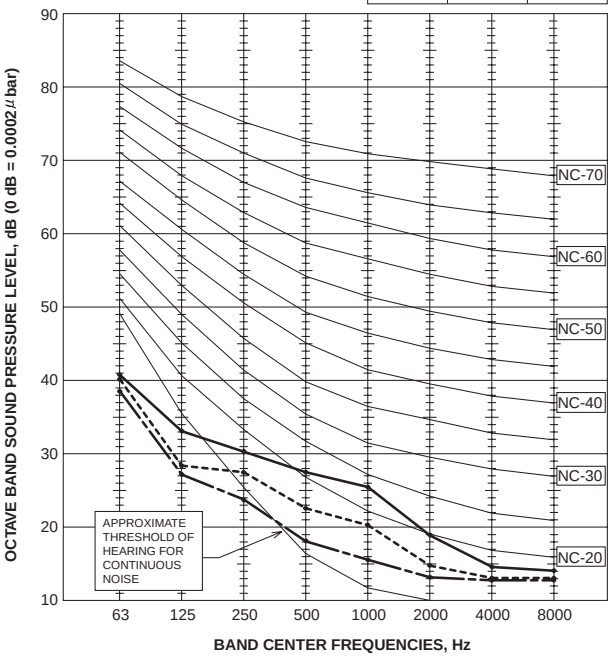

SEZ-M25DA
SEZ-M25DAL

External static pressure: 35Pa

NOTCH	SPL(dB)	LINE
High	31	
Middle	28	
Low	24	

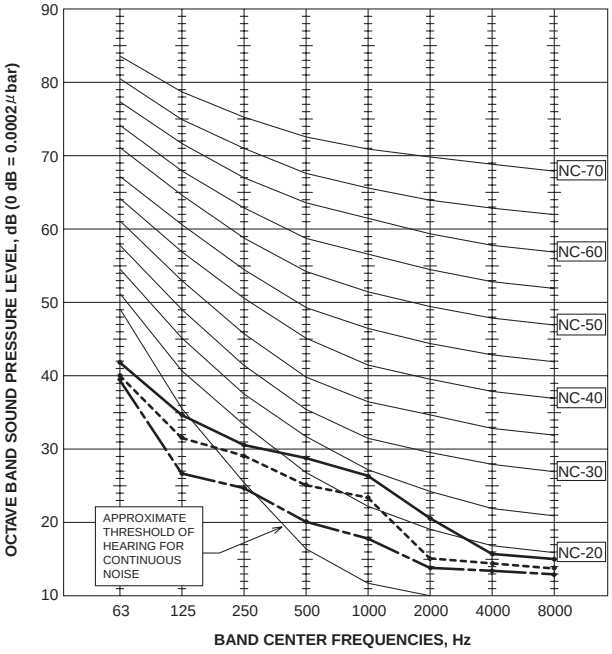

SEZ-M25DA
SEZ-M25DAL

External static pressure: 50Pa

NOTCH	SPL(dB)	LINE
High	33	
Middle	29	
Low	25	

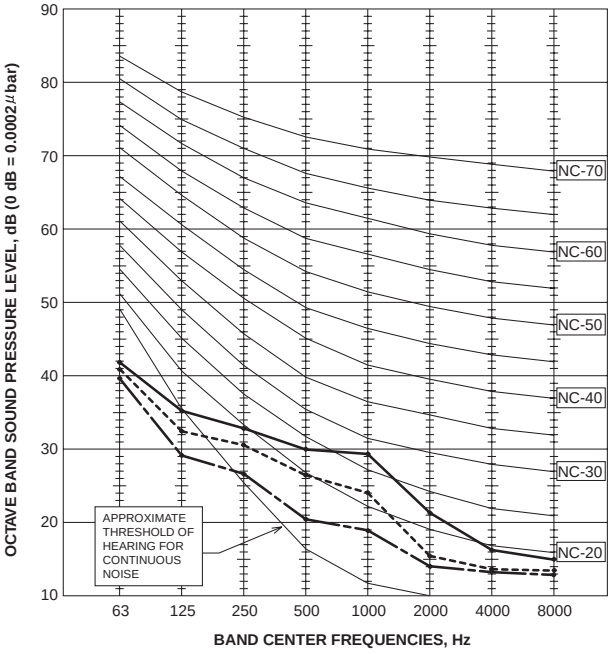

SEZ-M35DA
SEZ-M35DAL

External static pressure: 5Pa

NOTCH	SPL(dB)	LINE
High	33	
Middle	28	
Low	23	

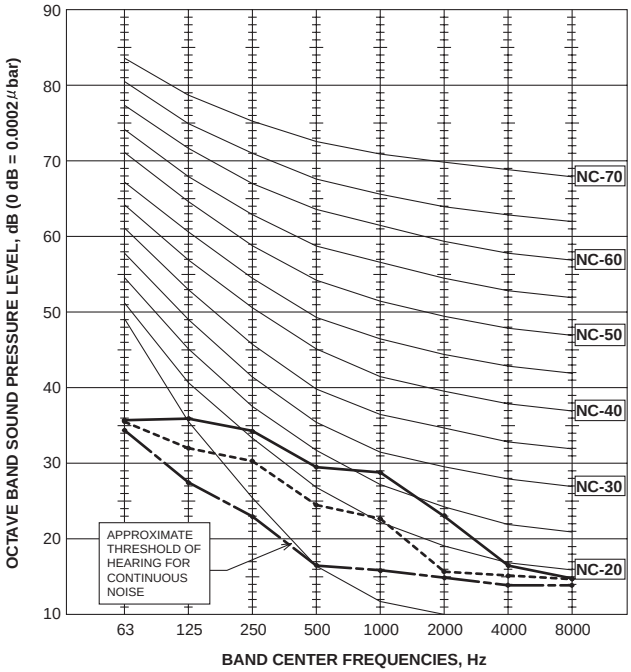

SEZ-M35DA
SEZ-M35DAL

External static pressure: 15Pa

NOTCH	SPL(dB)	LINE
High	33	
Middle	28	
Low	23	

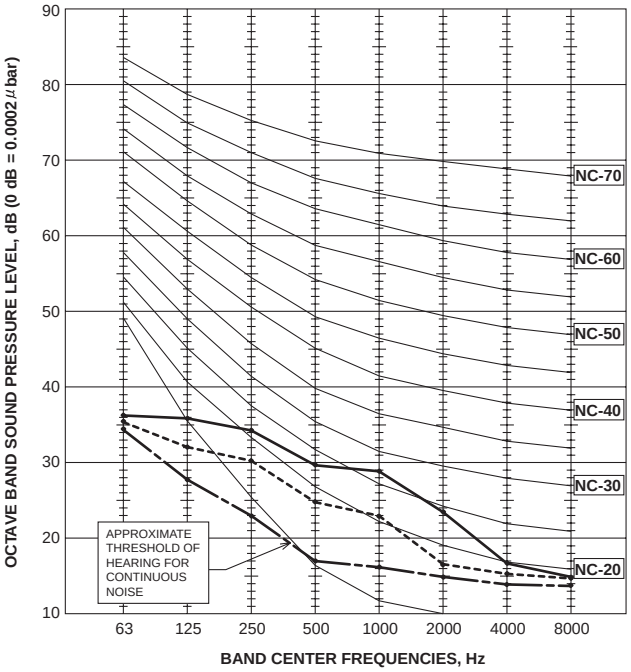

SEZ-M35DA
SEZ-M35DAL

External static pressure: 35Pa

NOTCH	SPL(dB)	LINE
High	34	
Middle	29	
Low	24	

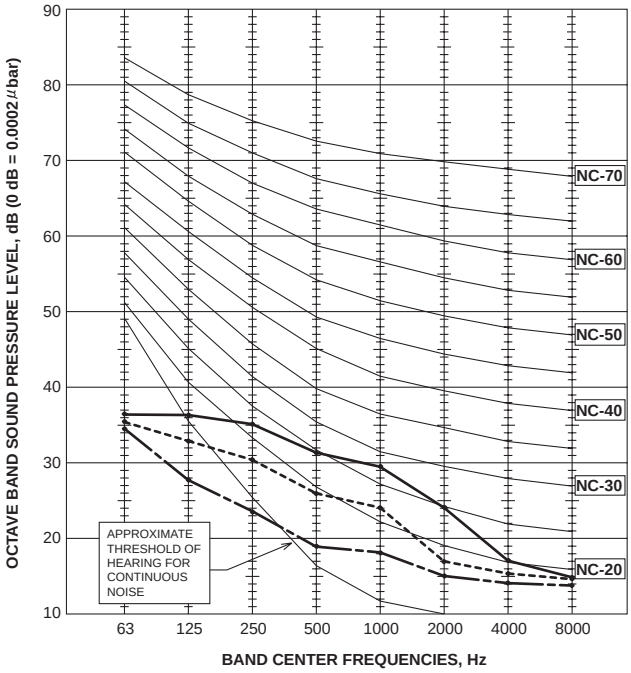

SEZ-M35DA
SEZ-M35DAL

External static pressure: 50Pa

NOTCH	SPL(dB)	LINE
High	35	
Middle	31	
Low	25	

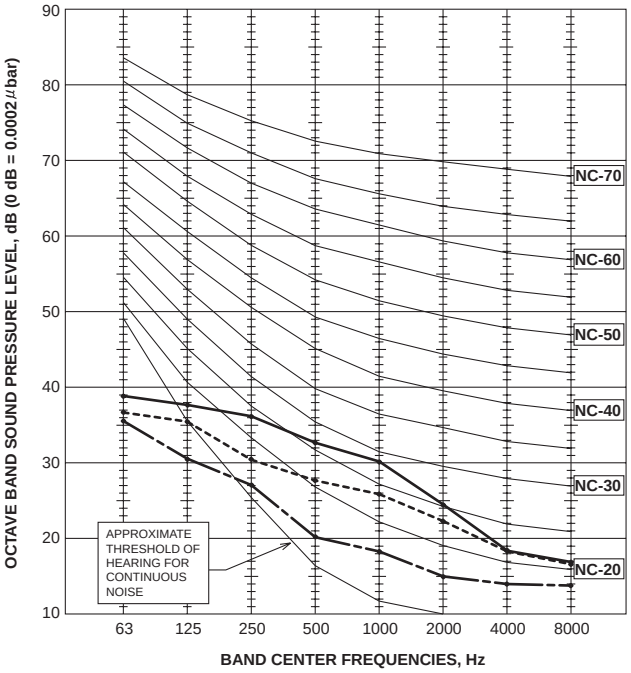

NOTE: The sound level is measured in an anechoic room where echoes are few, when compressor stops. The sound may be bigger than indicated level in actual use due to surrounding echoes. The sound level can be higher by about 2 dB than the indicated level during cooling and heating operation.

SEZ-M50DA
SEZ-M50DAL

External static pressure: 5Pa

NOTCH	SPL(dB)	LINE
High	36	
Middle	33	
Low	29	

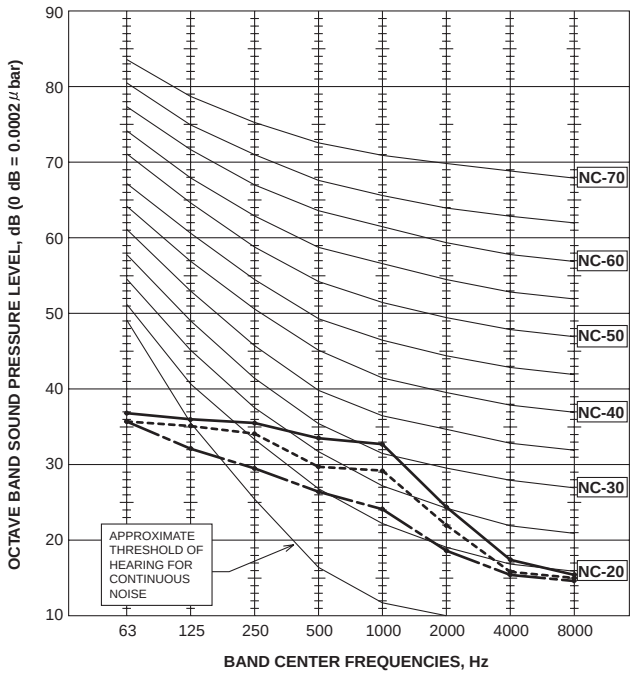

SEZ-M50DA
SEZ-M50DAL

External static pressure: 15Pa

NOTCH	SPL(dB)	LINE
High	37	
Middle	34	
Low	30	

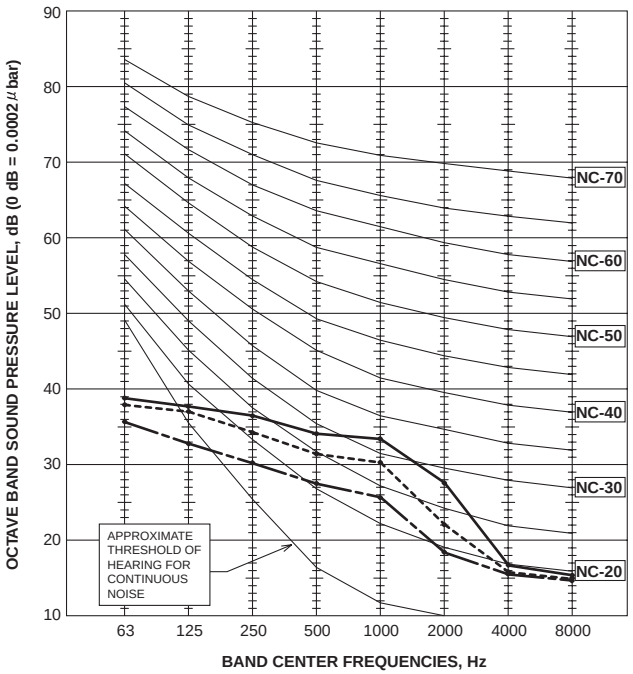

SEZ-M50DA
SEZ-M50DAL

External static pressure: 35Pa

NOTCH	SPL(dB)	LINE
High	38	
Middle	35	
Low	31	

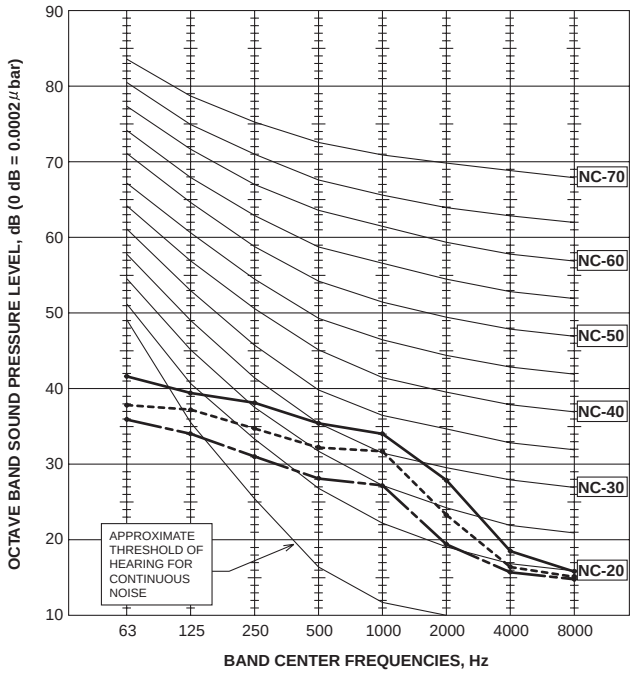

SEZ-KD50DA
SEZ-M50DAL

External static pressure: 50Pa

NOTCH	SPL(dB)	LINE
High	39	
Middle	36	
Low	32	

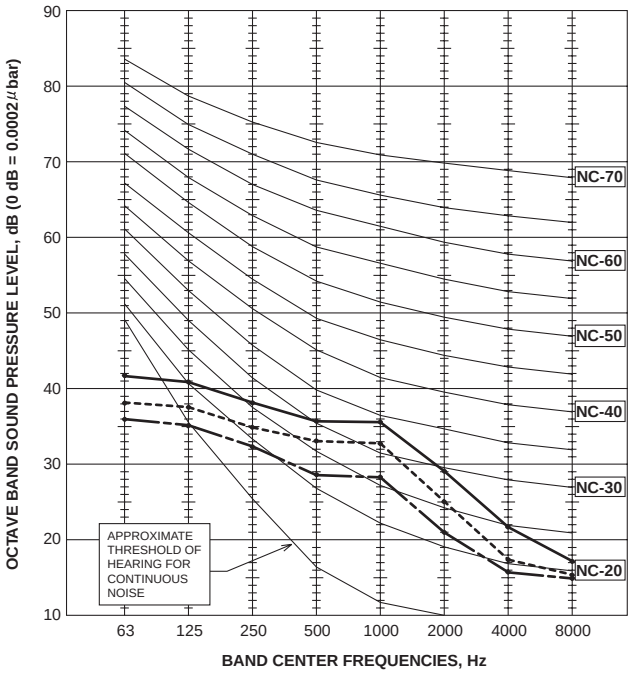

NOTE: The sound level is measured in an anechoic room where echoes are few, when compressor stops. The sound may be bigger than the indicated level in actual use due to surrounding echoes. The sound level can be highe by about 2 dB than the indicated level during cooling and heating operation.

SEZ-M60DA
SEZ-M60DAL

External static pressure: 5Pa

NOTCH	SPL(dB)	LINE
High	37	
Middle	33	
Low	29	

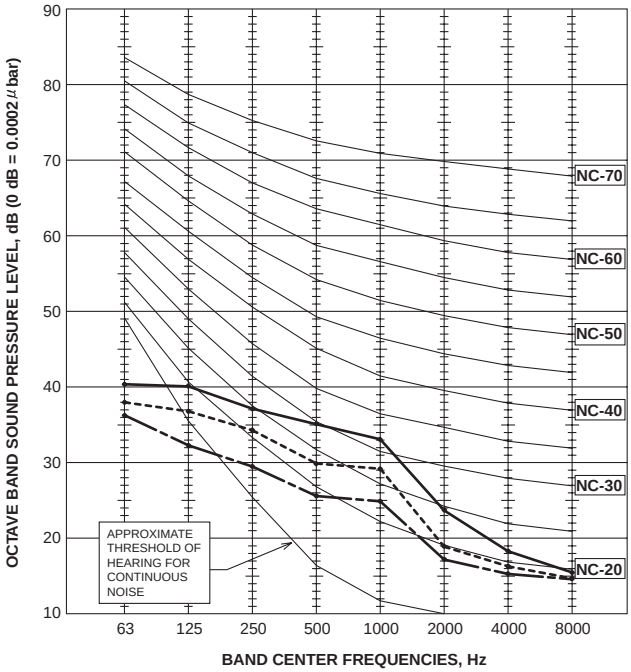

SEZ-M60DA
SEZ-M60DAL

External static pressure: 15Pa

NOTCH	SPL(dB)	LINE
High	38	
Middle	34	
Low	30	

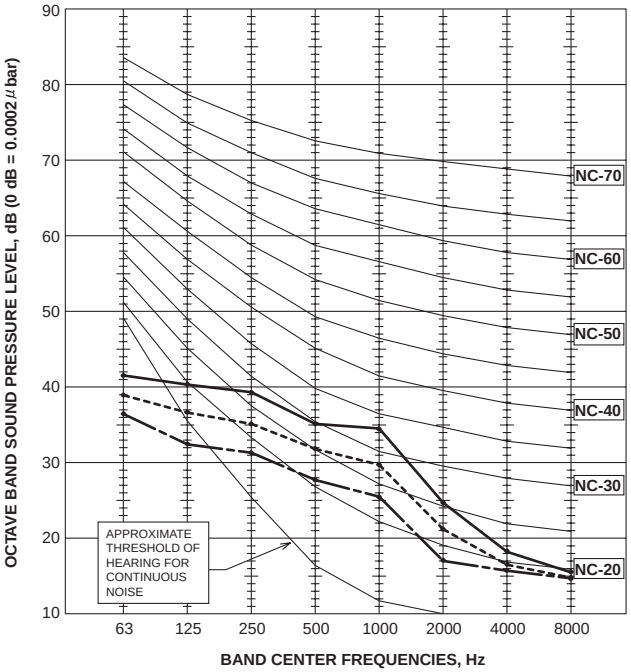

SEZ-M60DA
SEZ-M60DAL

External static pressure: 35Pa

NOTCH	SPL(dB)	LINE
High	39	
Middle	35	
Low	31	

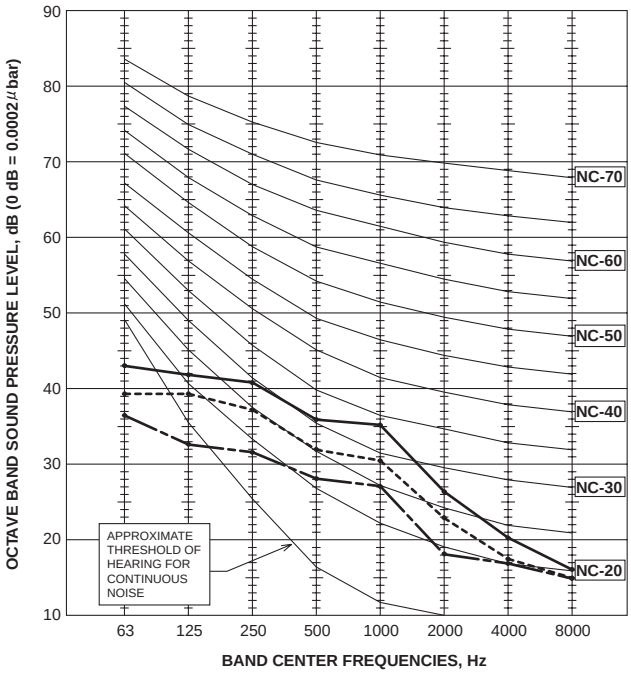

SEZ-M60DA
SEZ-M60DAL

External static pressure: 50Pa

NOTCH	SPL(dB)	LINE
High	39	
Middle	36	
Low	32	

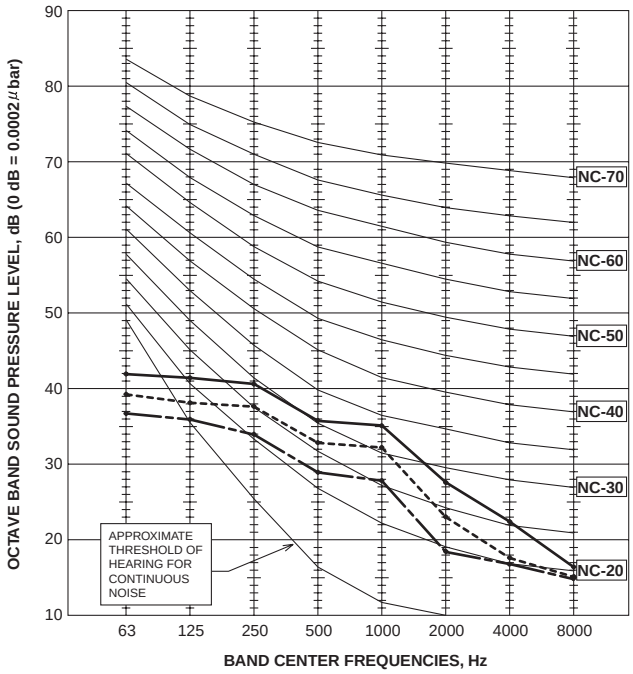

NOTE: The sound level is measured in an anechoic room where echoes are few, when compressor stops. The sound may be bigger than the indicated level in actual use due to surrounding echoes. The sound level can be highe by about 2 dB than the indicated level during cooling and heating operation.

SEZ-M71DA
SEZ-M71DAL

External static pressure: 5Pa

NOTCH	SPL(dB)	LINE
High	39	
Middle	34	
Low	29	

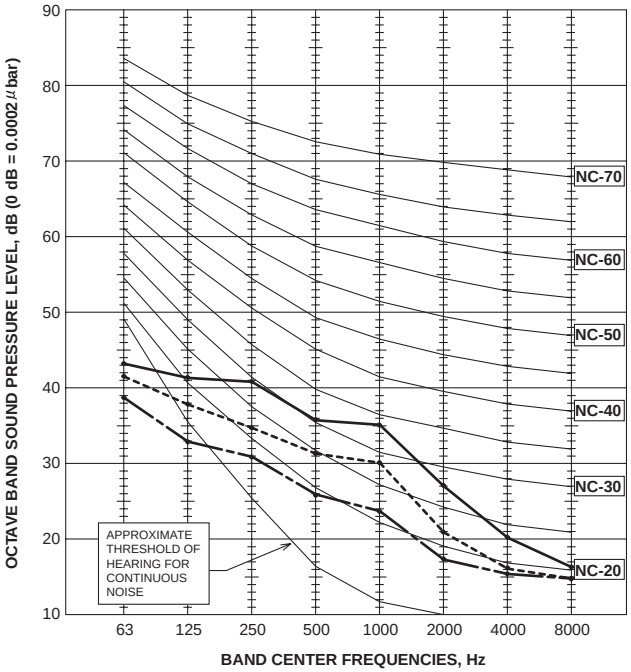

SEZ-M71DA
SEZ-M71DAL

External static pressure: 15Pa

NOTCH	SPL(dB)	LINE
High	40	
Middle	35	
Low	30	

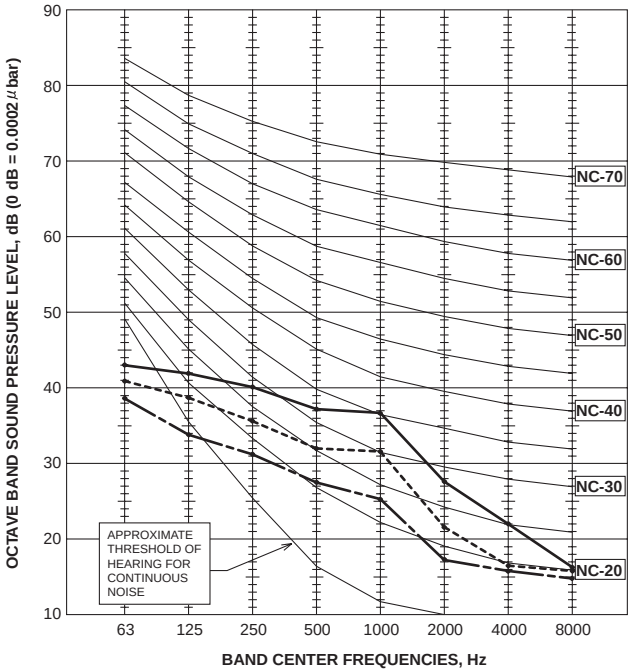

SEZ-M71DA
SEZ-M71DAL

External static pressure: 35Pa

NOTCH	SPL(dB)	LINE
High	41	
Middle	36	
Low	31	

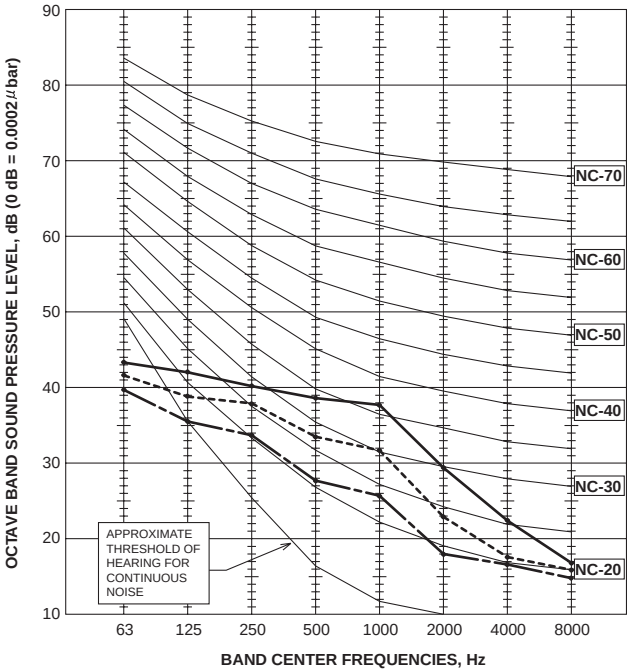

SEZ-M71DA
SEZ-M71DAL

External static pressure: 50Pa

NOTCH	SPL(dB)	LINE
High	42	
Middle	37	
Low	32	

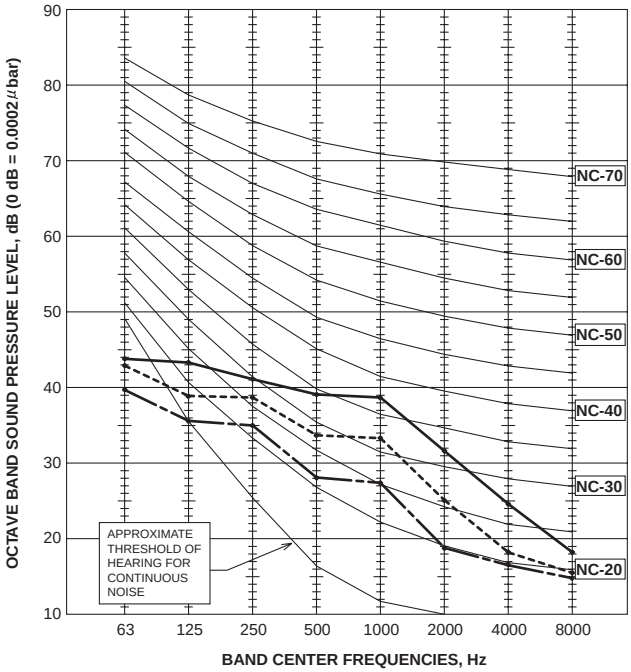

NOTE: The sound level is measured in an anechoic room where echoes are few, when compressor stops. The sound may be bigger than the indicated level in actual use due to surrounding echoes. The sound level can be higher by about 2 dB than the indicated level during cooling and heating operation.

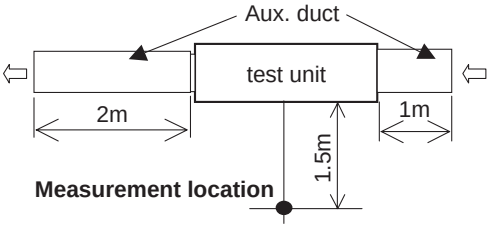

B.2.7 INDOOR FAN PERFORMANCE AND CORRECTED AIR FLOW

1. SEZ-M•DA(L)
INDOOR FAN PERFORMANCE AND CORRECTED AIR FLOW

SEZ-M25DA
SEZ-M25DAL
(External static pressure 5Pa) 220-240V 50/60Hz

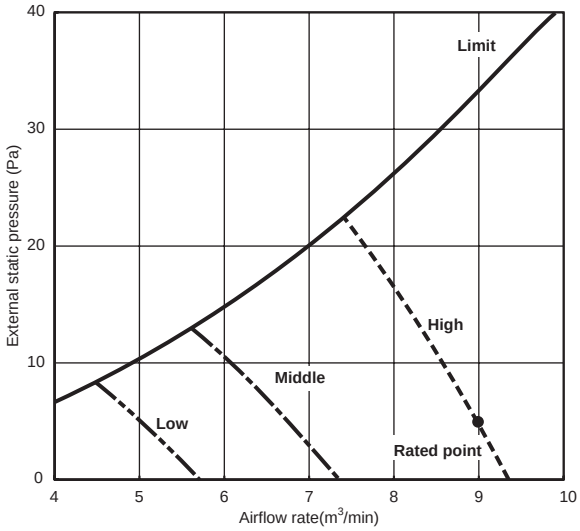

SEZ-M25DA
SEZ-M25DAL
(External static pressure 15Pa) 220-240V 50/60Hz

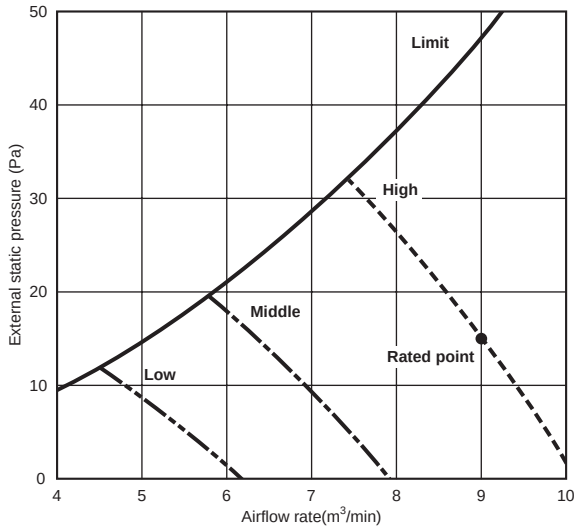

SEZ-M25DA
SEZ-M25DAL
(External static pressure 35Pa) 220-240V 50/60Hz

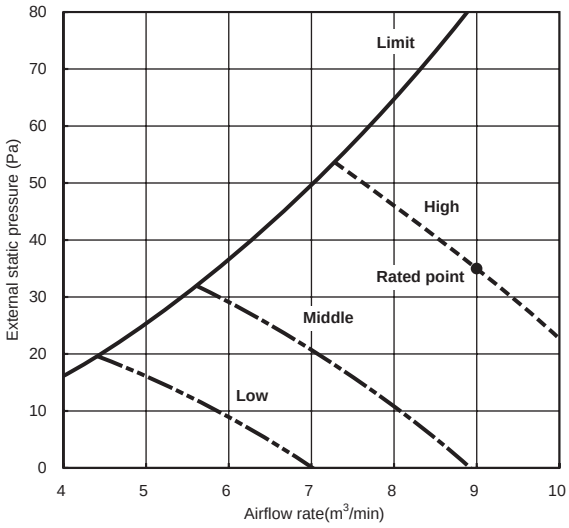

SEZ-M25DA
SEZ-M25DAL
(External static pressure 50Pa) 220-240V 50/60Hz

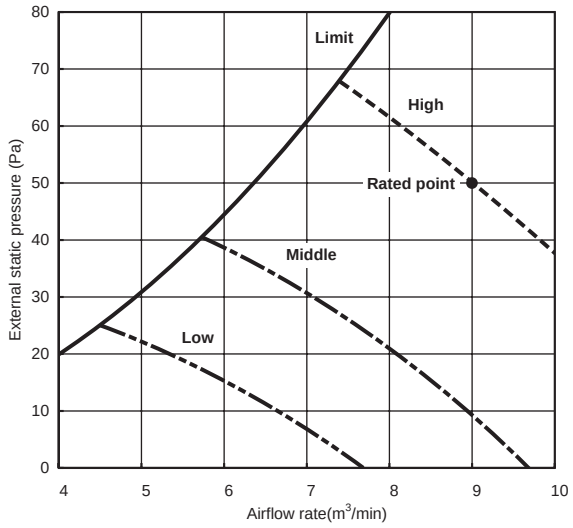

SEZ-M35DA
SEZ-M35DAL

(External static pressure 5Pa) 220-240V 50/60Hz

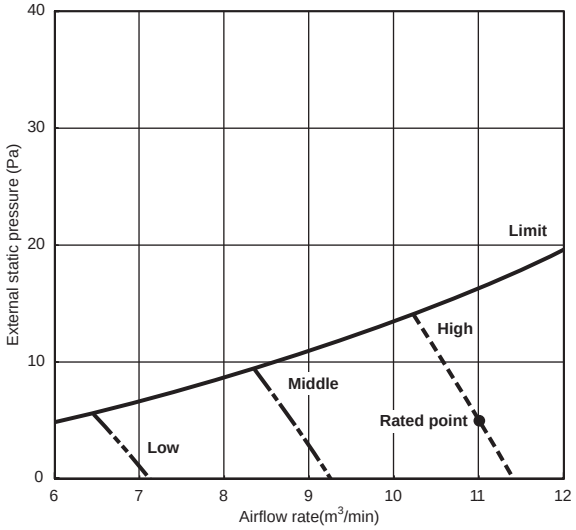

SEZ-M35DA
SEZ-M35DAL

(External static pressure 15Pa) 220-240V 50/60Hz

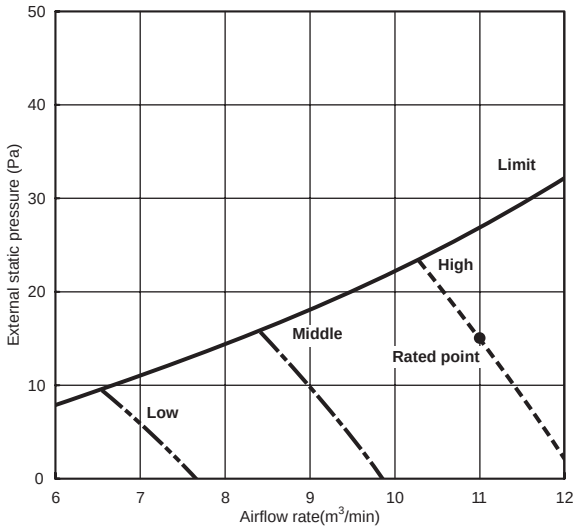

SEZ-M35DA
SEZ-M35DAL

(External static pressure 35Pa) 220-240V 50/60Hz

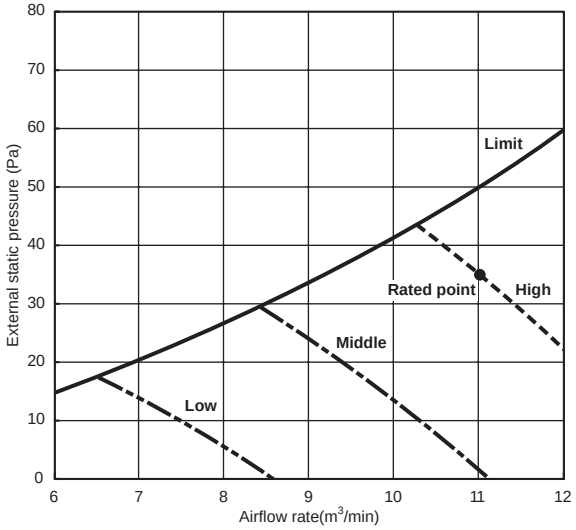

SEZ-M35DA
SEZ-M35DAL

(External static pressure 50Pa) 220-240V 50/60Hz

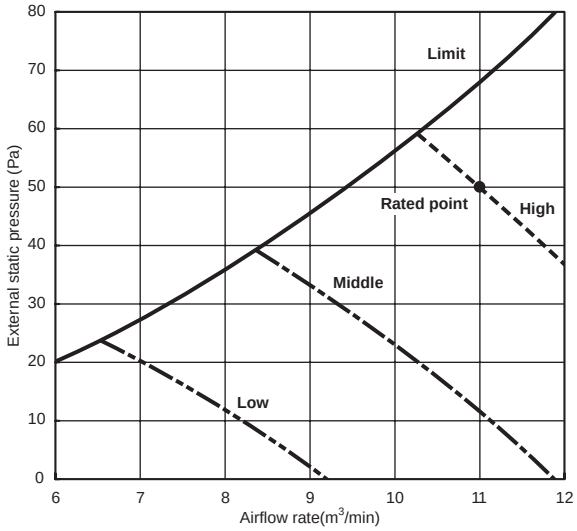

SEZ-M50DA
SEZ-M50DAL

(External static pressure 5Pa) 220-240V 50/60Hz

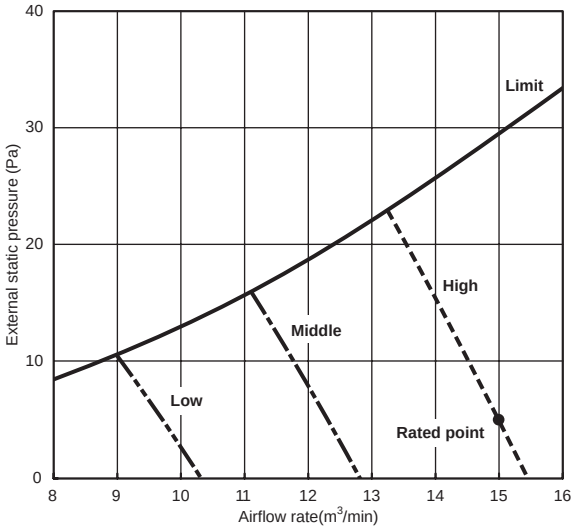

SEZ-M50DA
SEZ-M50DAL

(External static pressure 15Pa) 220-240V 50/60Hz

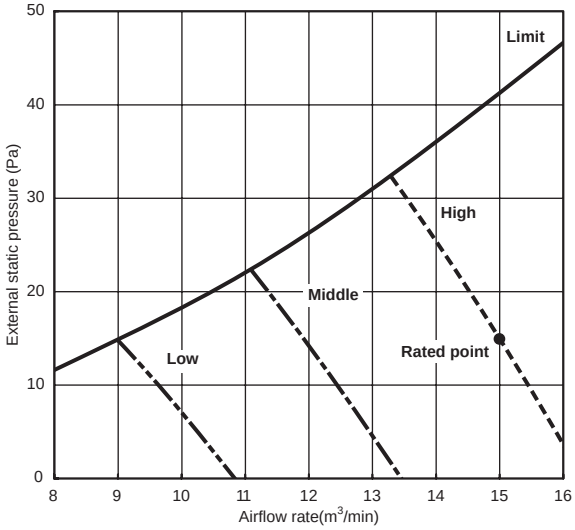

SEZ-M50DA
SEZ-M50DAL

(External static pressure 35Pa) 220-240V 50/60Hz

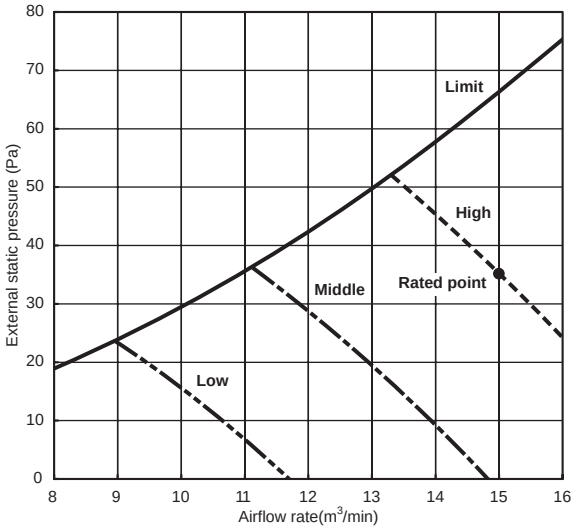

SEZ-M50DA
SEZ-M50DAL

(External static pressure 50Pa) 220-240V 50/60Hz

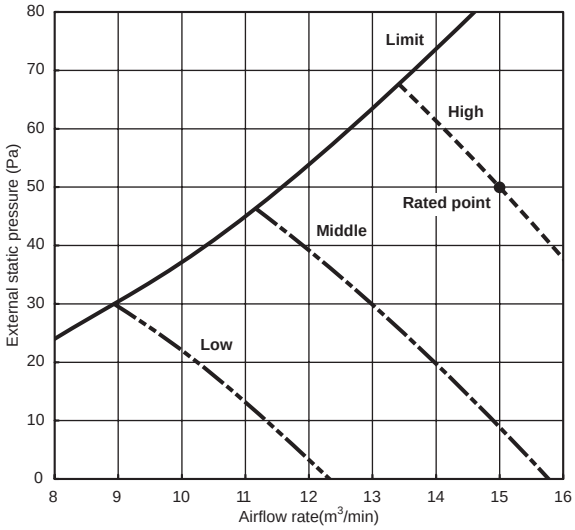

SEZ-M60DA
SEZ-M60DAL

(External static pressure 5Pa) 220-240V 50/60Hz

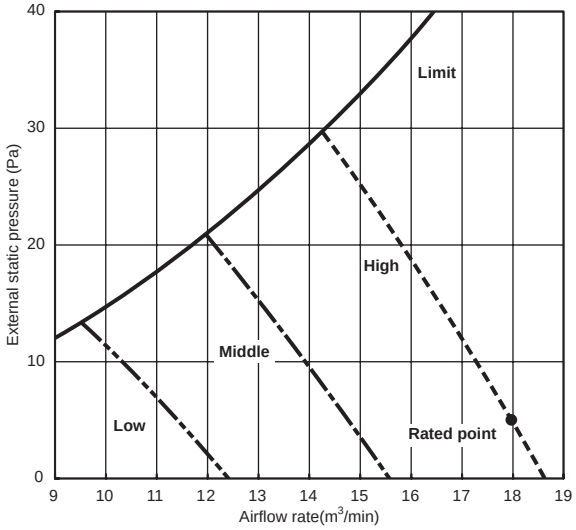

SEZ-M60DA
SEZ-M60DAL

(External static pressure 15Pa) 220-240V 50/60Hz

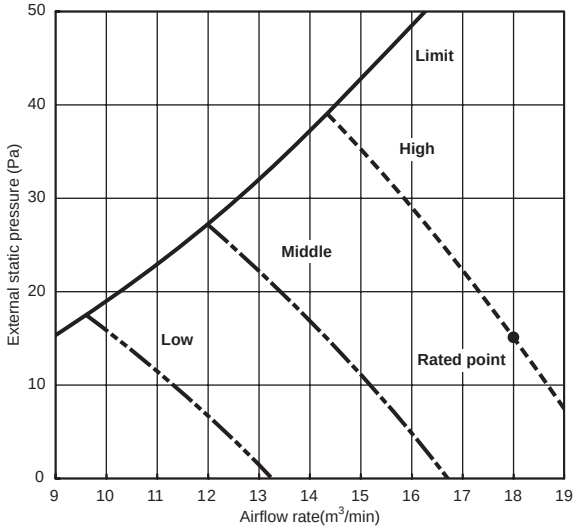

SEZ-M60DA
SEZ-M60DAL

(External static pressure 35Pa) 220-240V 50/60Hz

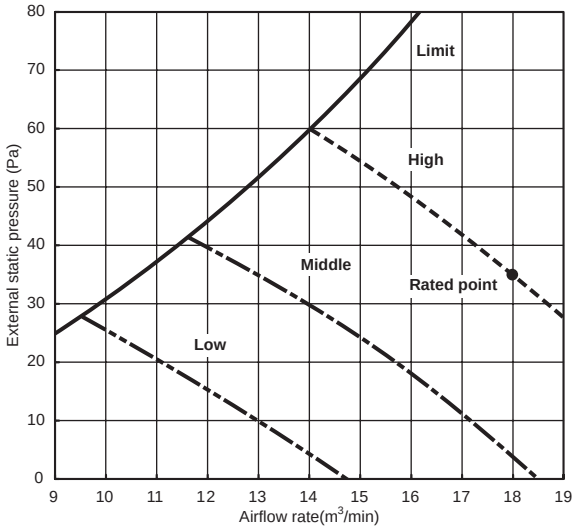

SEZ-M60DA
SEZ-M60DAL

(External static pressure 50Pa) 220-240V 50/60Hz

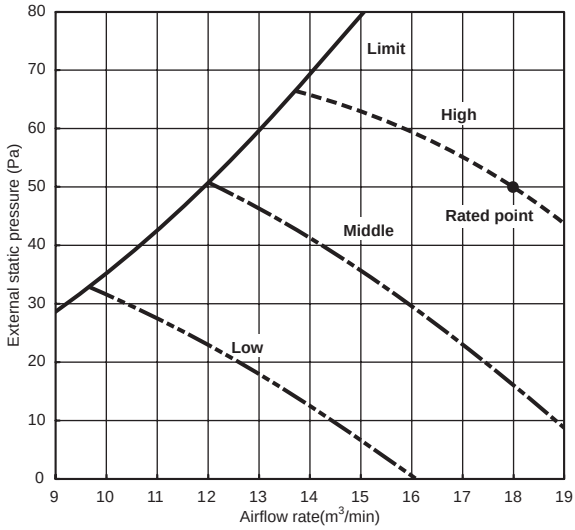

SEZ-M71DA
SEZ-M71DAL
(External static pressure 5Pa) 220-240V 50/60Hz

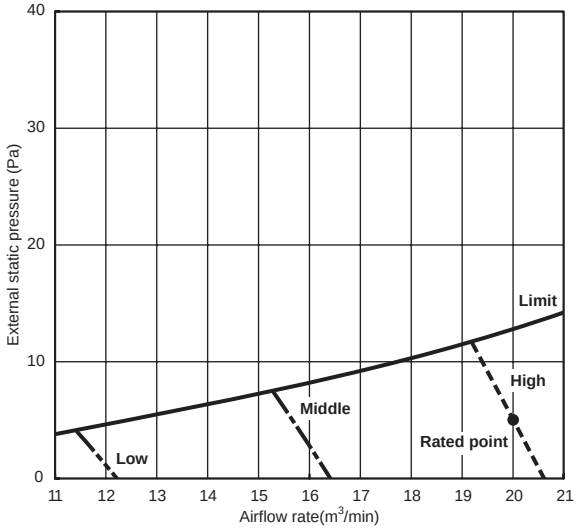

SEZ-M71DA
SEZ-M71DAL
(External static pressure 15Pa) 220-240V 50/60Hz

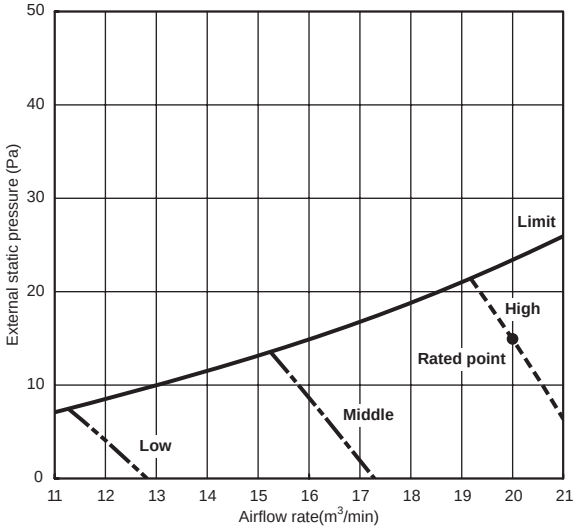

SEZ-M71DA
SEZ-M71DAL
(External static pressure 35Pa) 220-240V 50/60Hz

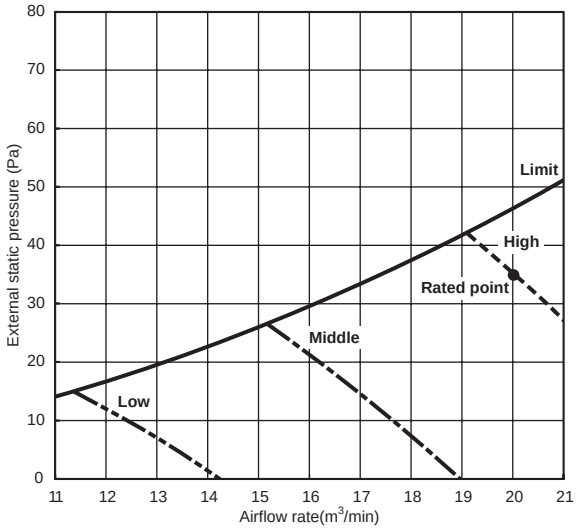

SEZ-M71DA
SEZ-M71DAL
(External static pressure 50Pa) 220-240V 50/60Hz

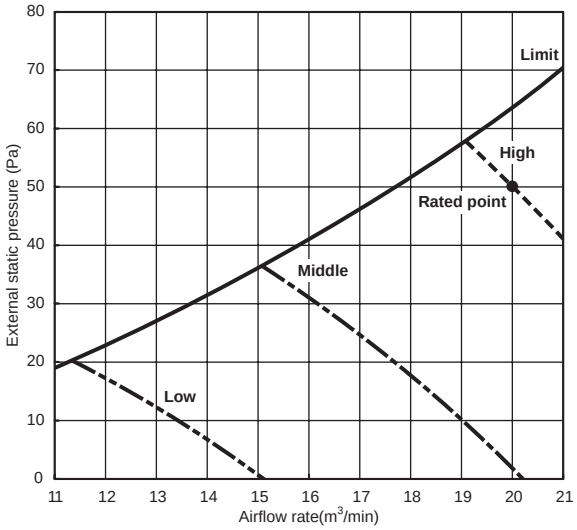

B.2.8 CENTER OF GRAVITY POSITION

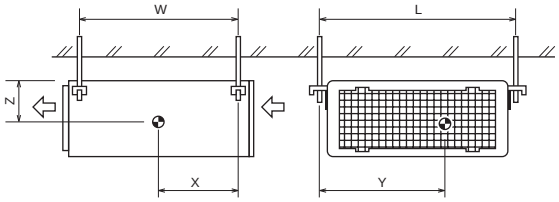

Unit: mm

Model name	W	L	X	Y	Z
SEZ-KD25	625	752	263	351	106
SEZ-KD35	625	952	286	448	104
SEZ-KD50	625	952	280	437	104
SEZ-KD60	625	1152	285	527	104
SEZ-KD71	625	1152	285	527	104

B.2.9 REMOTE CONTROLLER

B.2.9.1 WIRELESS REMOTE CONTROLLER [PAR-SL97A-E]

When cover is open

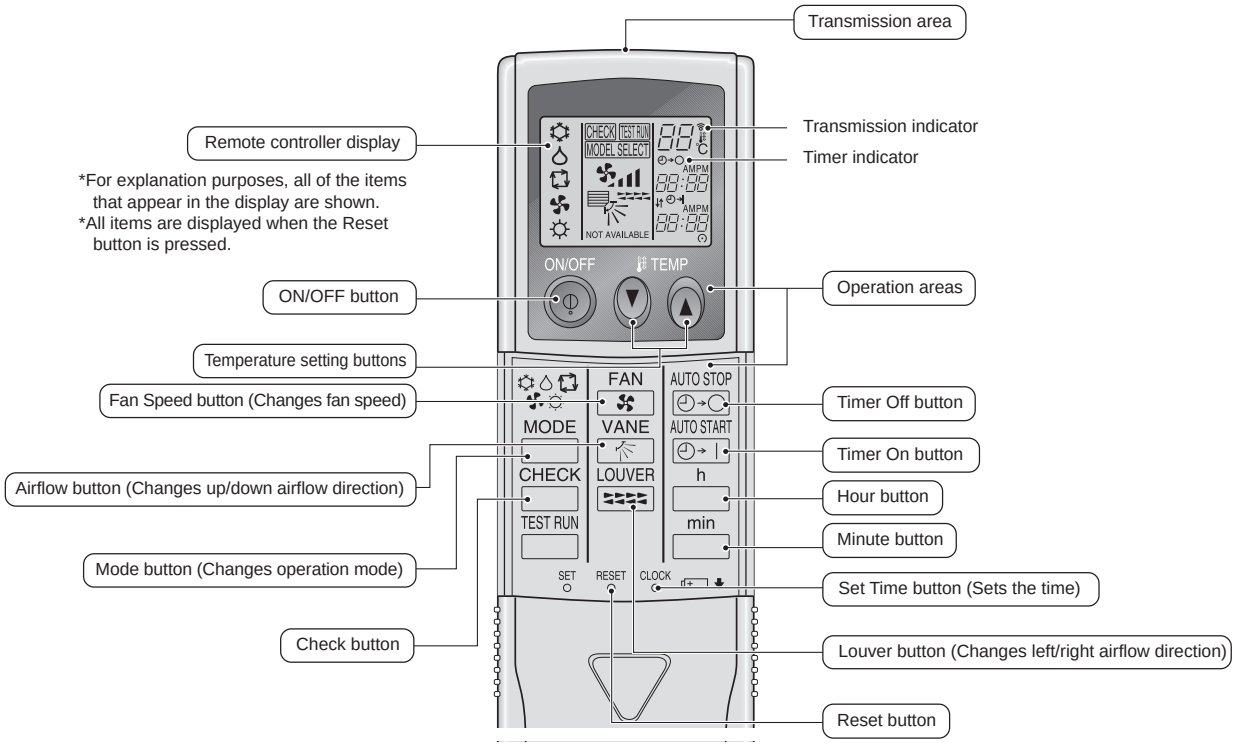

B.3 OUTDOOR UNIT (SUZ)

B.3.1 OUTLINES AND DIMENSIONS B-82
B.3.1.1 R32 type B-82
B.3.1.2 R410A type B-85
B.3.2 WIRING DIAGRAM B-87
B.3.2.1 R32 type B-87
B.3.2.2 R410A type B-91
B.3.3 REFRIGERANT SYSTEM DIAGRAM B-94
B.3.3.1 R32 type B-94
B.3.3.2 R410A type B-96
B.3.4 PERFORMANCE CURVES B-99
B.3.4.1 R32 type B-99
B.3.4.2 R410A type B-101
B.3.5 NOISE CRITERIA CURVES B-103
B.3.5.1 R32 type B-103
B.3.5.2 R410A type B-104
B.3.6 CAPACITY CORRECTION RATIO CURVE PIPING LENGTH B-105
B.3.6.1 R32 type B-105
B.3.6.2 R410A type B-106
B.3.7 EARTHQUAKE-PROOF STRENGTH ANALYSIS B-107
B.3.7.1 R32 type B-107
B.3.7.2 R410A type B-112

B.3.1 OUTLINES AND DIMENSIONS

B.3.1.1 R32 type

Unit : mm

SUZ-M25VA
SUZ-M35VA

OUTDOOR UNIT

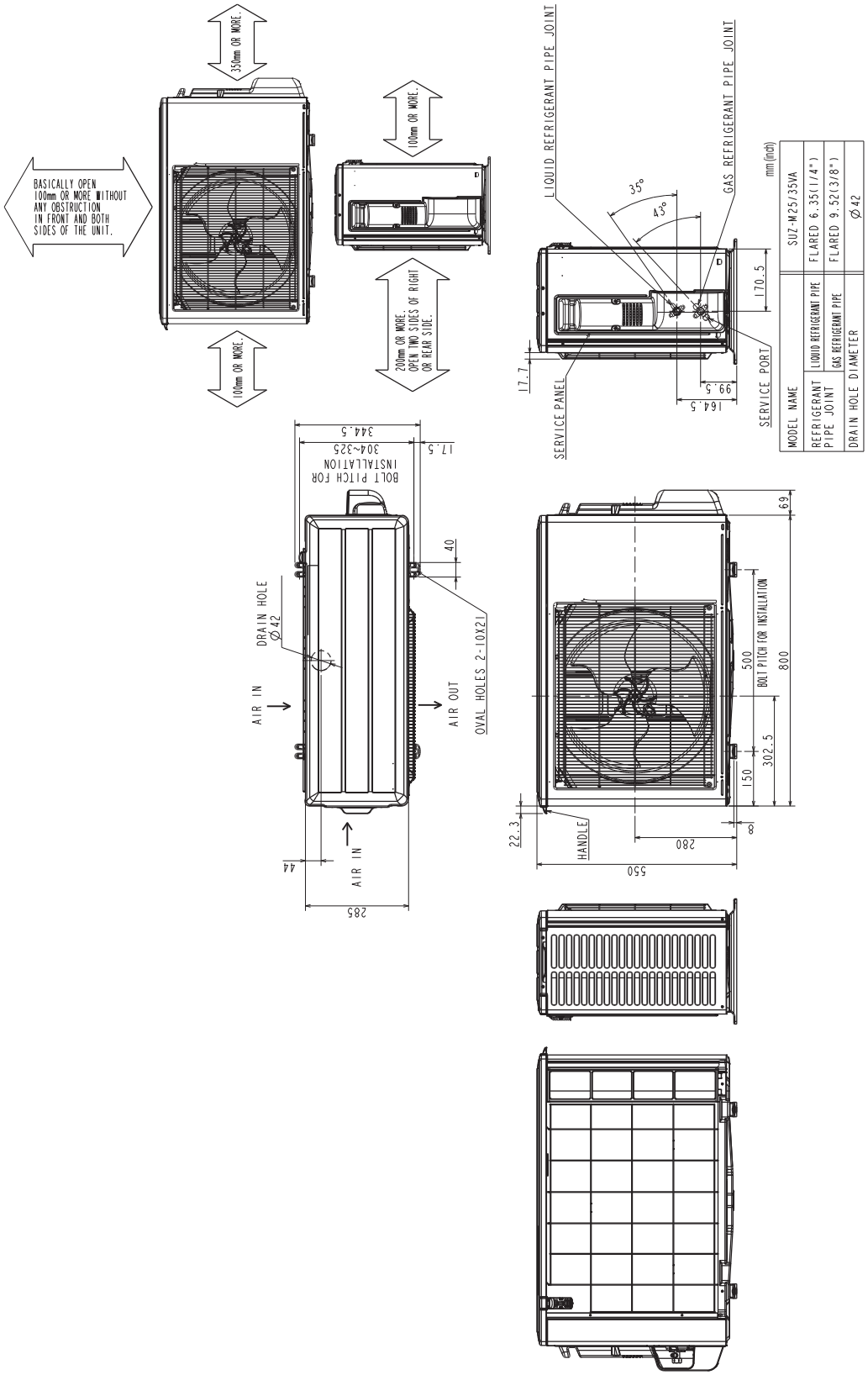

SUZ-M50VA

Unit: mm

OUTDOOR UNIT

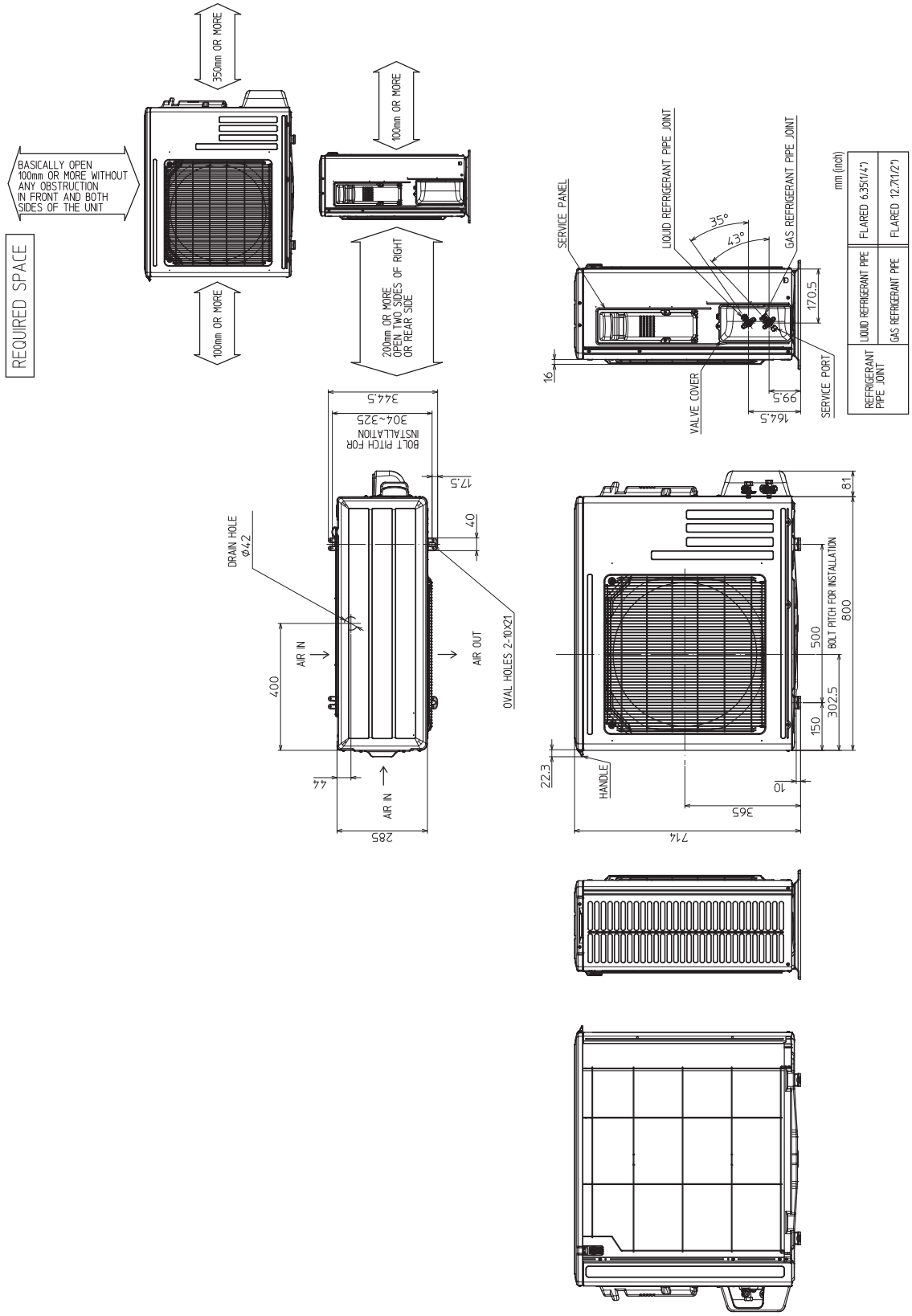

SUZ-M60VA
SUZ-M71VA

Unit: mm

OUTDOOR UNIT

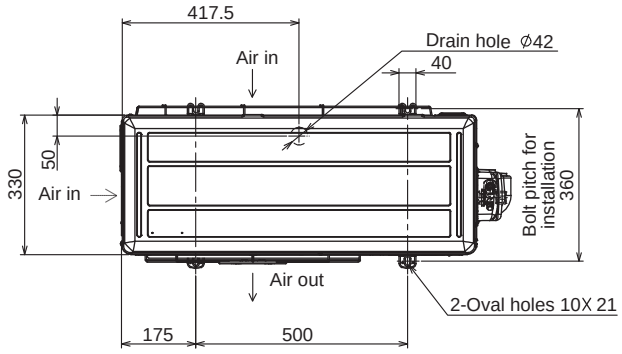

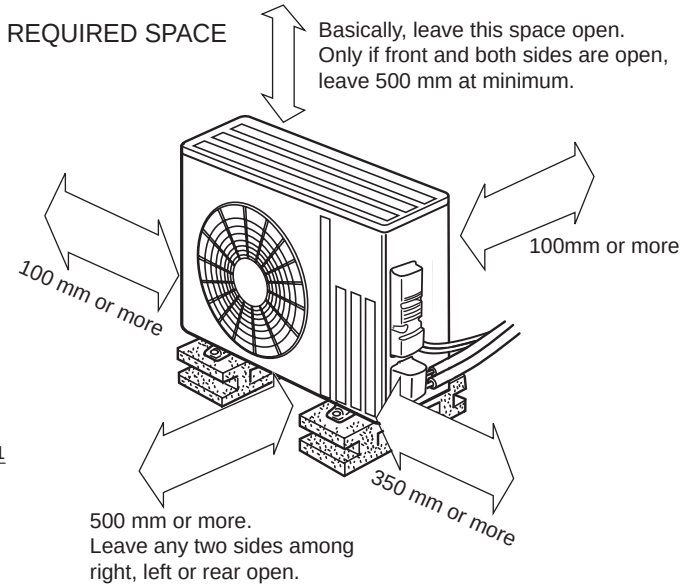

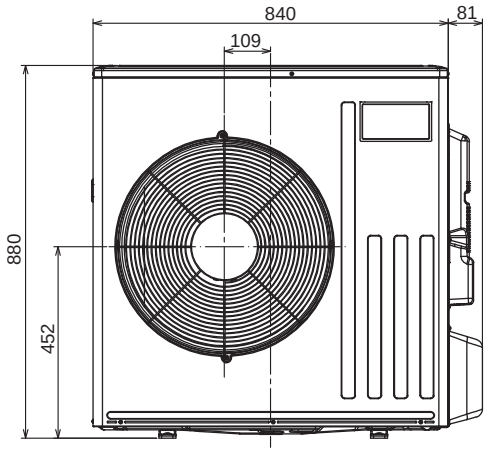

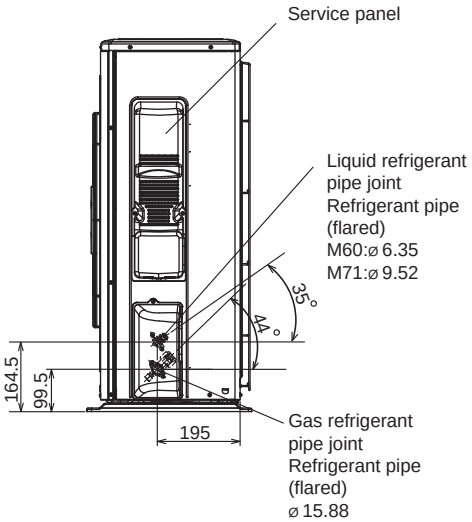

B.3.1.2 R410A type

SUZ-KA25VA6
SUZ-KA35VA6

Unit : mm

OUTDOOR UNIT

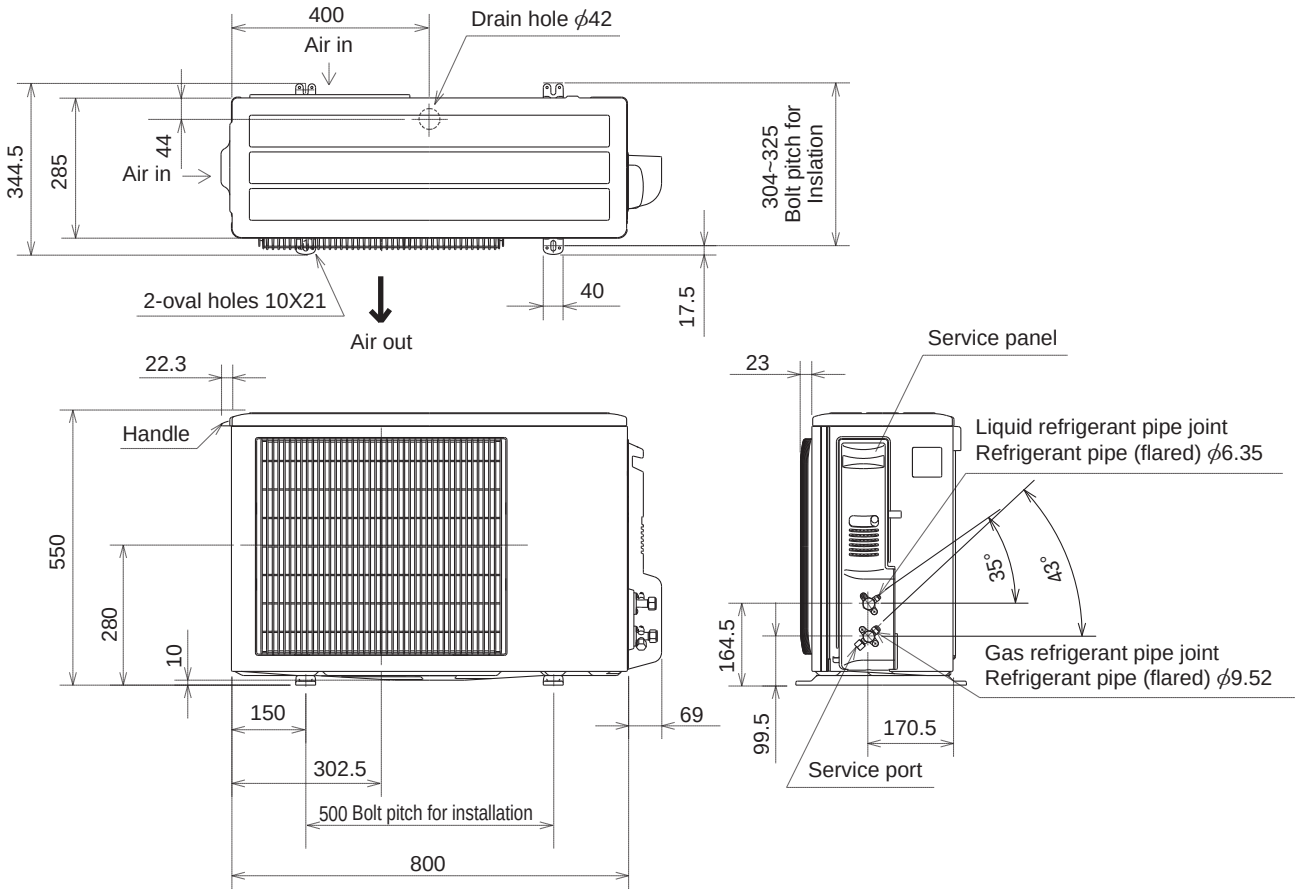

REQUIRED SPACE

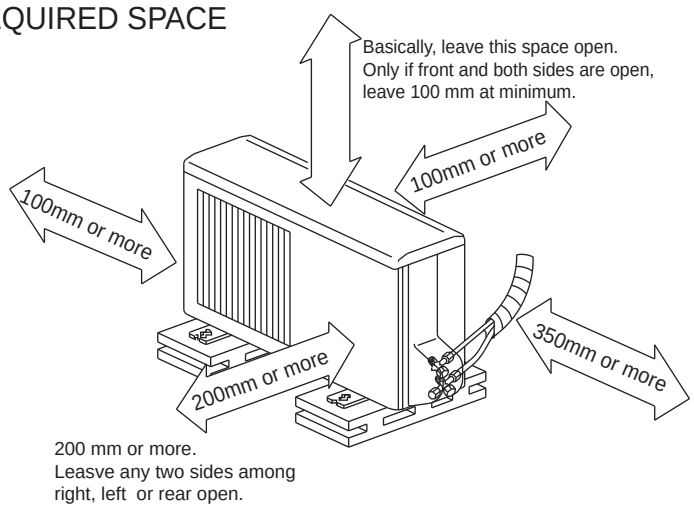

SUZ-KA50VA6
SUZ-KA60VA6
SUZ-KA71VA6

Unit: mm

OUTDOOR UNIT

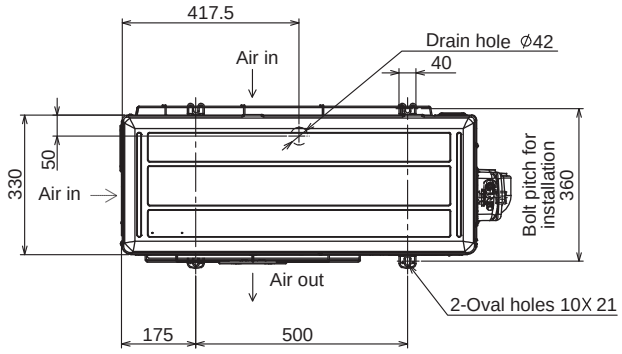

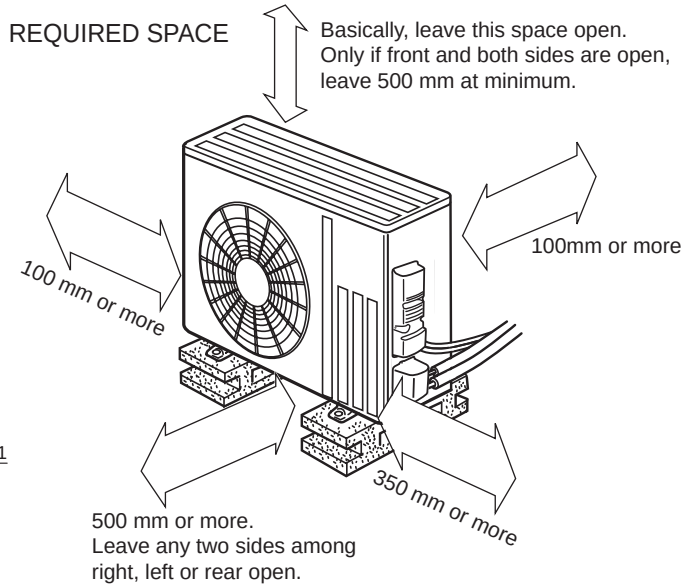

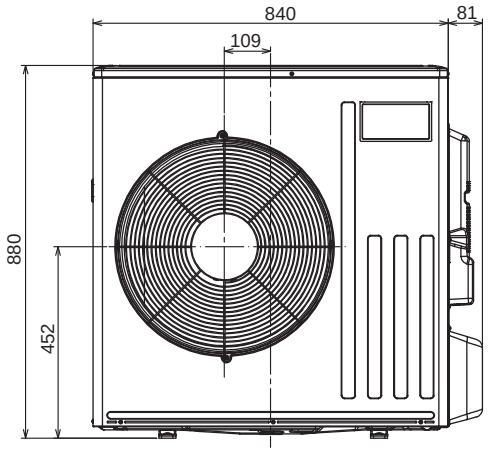

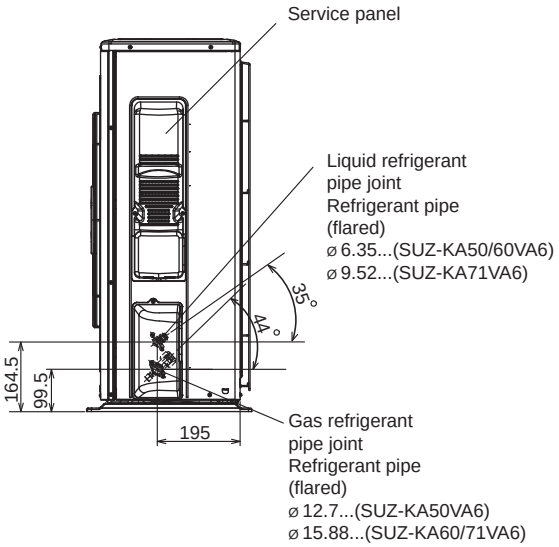

B.3.2 WIRING DIAGRAM

B.3.2.1 R32 type

SUZ-M25VA

OUTDOOR UNIT

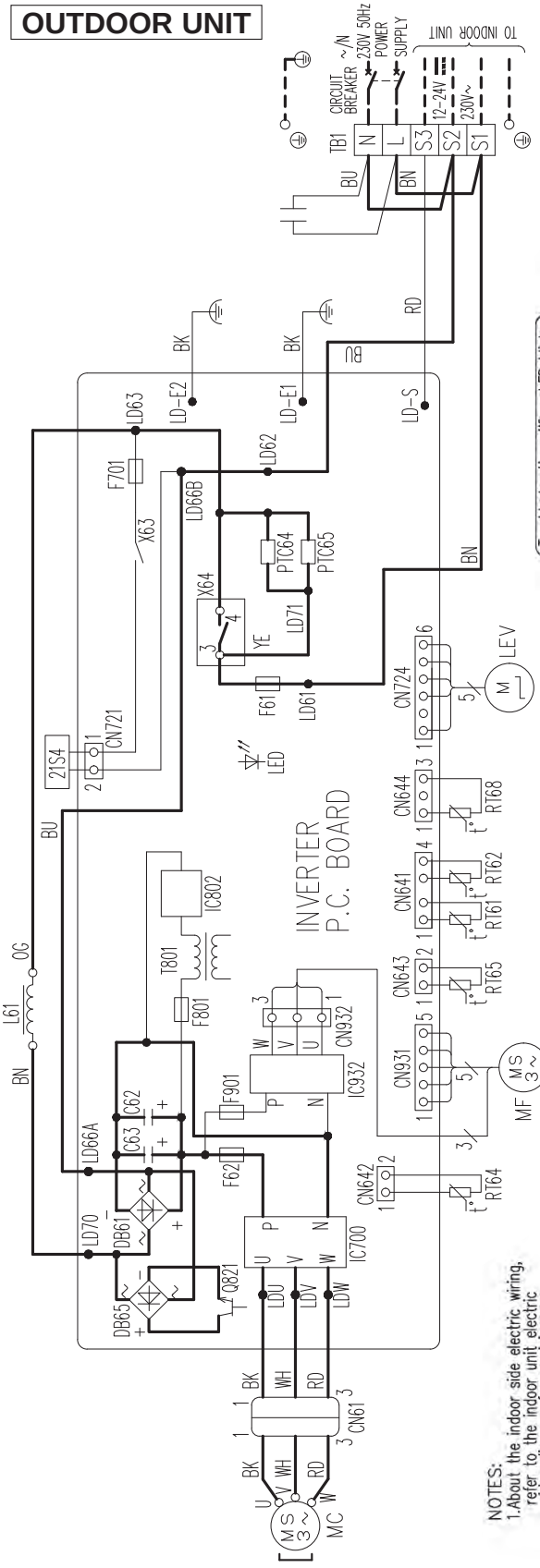

NOTES:
1. About the indoor side electric wiring, refer to the indoor unit electric wiring diagram for servicing.
2. Use copper supply wires.
3. Symbols indicate, ▭▭▭ : Terminal block
   ⊖⊖⊖⊖⊖ : Connector

SYMBOL	NAME	SYMBOL	NAME	SYMBOL	NAME
CN61	CONNECTOR	LEV	EXPANSION VALVE COIL	RT65	AMBIENT TEMP. THERMISTOR
C62, C63	SMOOTHING CAPACITOR	L61	REACTOR	RT68	OUTDOOR HEAT EXCHANGER TEMP. THERMISTOR
DB61, DB65	DIODE MODULE	MC	COMPRESSOR	TB1	TERMINAL BLOCK
F61	FUSE (25A 250V)	MF	FAN MOTOR	T801	TRANSFORMER
F62	FUSE (15A 250V)	PTC64, PTC65	CIRCUIT PROTECTION	X63, X64	RELAY
F701, F801, F901	FUSE (13.15AL250V)	Q821	SWITCHING POWER TRANSISTOR	21S4	REVERSING VALVE COIL
IC700, IC932	POWER MODULE	R161	DEFROST THERMISTOR		
IC802	POWER DEVICE	RT62	DISCHARGE TEMP. THERMISTOR		
LED	LED	RT64	FIN TEMP. THERMISTOR		

Safety Precautions in Servicing Electrical Parts

Before performing inspection and repairs, be sure to confirm that the voltage of the smoothing capacitor is less than 10V DC between its plus (+) and minus (−) terminals when measured with a tester ten minutes after the power has been turned off.

Since the electrolytic capacitor used for the inverter is usually charged with 325V DC voltage, and the electric charge remains for a while after the power is cut, the shock would be given if contacted its charging part (not only the electrolytic capacitor), resulting sometimes in serious injury.

In case the residual voltage of the electrolytic capacitor mentioned above exceeds 10V DC, connect the plus (+) and minus (−) terminals with either a discharge resistor (approx. 100Ω, 40W) or a soldering iron plug to let the electric charge discharge.

One Point Checking for Inverter

Item	Symptom	Corresponds
① Power supply	No 230V AC between S1 and S2 of TERMINAL BLOCK	The check of wiring of connecting the indoor unit and outdoor unit
② Fuse	Blown	Replace the INVERTER P.C. BOARD
③ Power for main circuit	No 325V DC between P and N of IC700	Replace the INVERTER P.C. BOARD
④ Inverter output	Voltages (AC) between wires (U, V, W) differ when the unit is operated with CN61 disconnected	1.Check the connector is connected certainly 2.Replace the INVERTER P.C. BOARD
⑤ LED display / In case that compressor is not in operation	Lit	Normal
	Blinking	Abnormal or protective shutdown (Refer to "Troubleshootings When LED blinks" mentioned in right)
	Goes out	Replace the INVERTER P.C. BOARD

Troubleshootings When LED blinks

When the compressor stops due to protective functions, the LED blinks on the outdoor INVERTER P.C. BOARD. Perform the inspection referring to the table below. For your reference, when the LED is lit, the unit is in normal operation. When the LED goes out, run the unit in the emergency operation and check the blinking frequency of LED.

Blinking frequency of LED on the INVERTER P.C. BOARD in the outdoor unit	Troubleshooting: Symptom	Troubleshooting: Corresponds
Once	Abnormality in outdoor power supply system	1.Check outdoor INVERTER P.C. BOARD 2.Reconnect compressor connector 3.Check compressor 4.Check stop valve
Once	Abnormality in outdoor thermistor	Check thermistor including poor contact or disconnection of its connector
Once	Abnormality in outdoor control system	Check outdoor INVERTER P.C. BOARD
Twice	Protection for overcurrent	1.Check outdoor INVERTER P.C. BOARD 2.Reconnect compressor connector 3.Check compressor 4.Check stop valve
3 times	Protection for overheat of discharge temperature	1.Charge refrigerant 2.Check expansion valve
4 times	Protection for overheat of fin temperature/INVERTER P.C. BOARD temperature	1.Check air circulation in outdoor unit (Short cycle) 2.Check outdoor fan motor 3.Check obstruction in air inlet/outlet of outdoor unit
5 times	Protection for raising of high pressure	1.Check refrigerant circuit (Clogging, etc.) 2.Check stop valve
6 times	Abnormality of serial signal	Check INDOOR ELECTRONIC CONTROL P.C. BOARD and outdoor INVERTER P.C. BOARD
8 times	Abnormality of compressor synchronism	1.Reconnect compressor connector 3.Check outdoor INVERTER P.C. BOARD 2.Check compressor
10 times	Abnormality of outdoor fan motor	1.Reconnect connectors for fan motor INVERTER P.C. BOARD 2.Check outdoor fan motor 3.Check outdoor fan motor
11 times	Protection for stop valve (Closed valve)	Check stop valve
12 times	Abnormality of compressor phase current	Check outdoor INVERTER P.C. BOARD
13 times	Abnormality of DC voltage	Check outdoor INVERTER P.C. BOARD
16 times	Abnormality of reversing valve	1.Check reversing valve 2.Check outdoor INVERTER P.C. BOARD
16 times	Abnormality in refrigerant system	Refer to SERVICE MANUAL

The blinking frequency shows the number of times the LED blinks after every 2.5-second OFF.
(Example) When the blinking frequency is "twice"

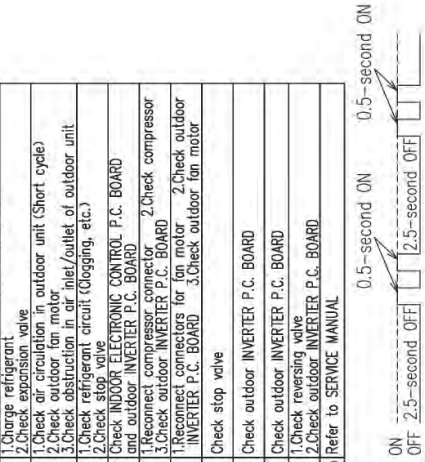

* For details, refer to the appropriate SERVICE MANUAL.

SUZ-M35VA

OUTDOOR UNIT

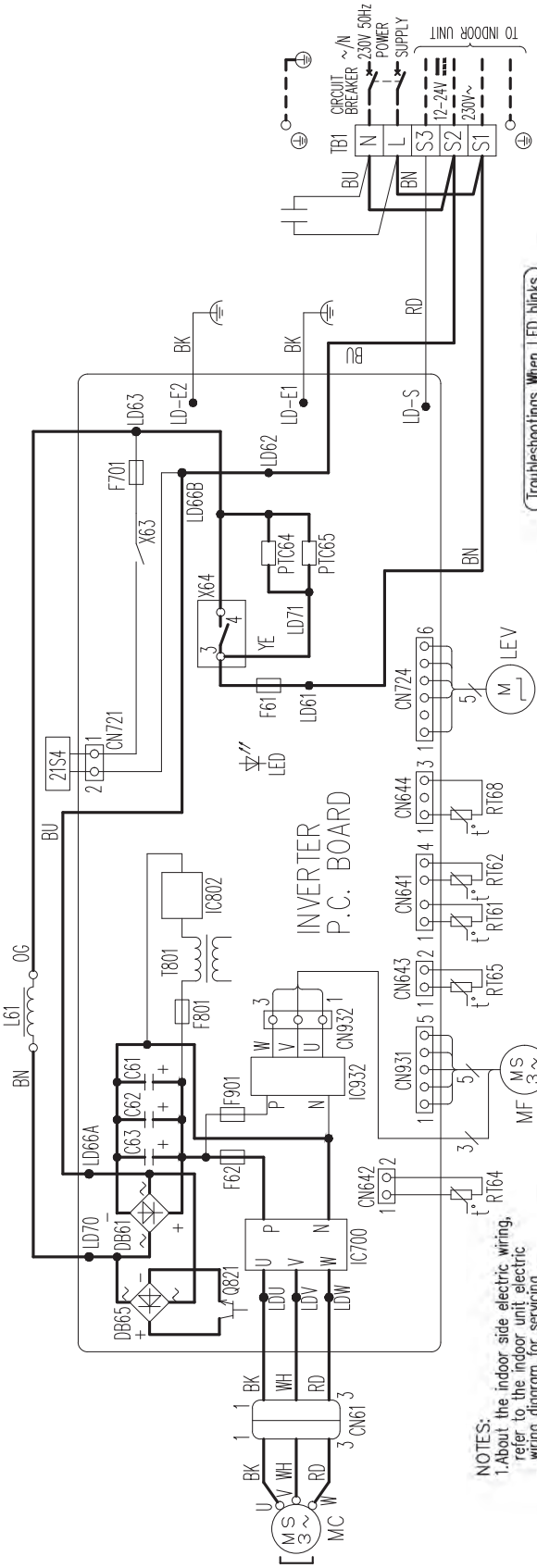

NOTES:
1.About the indoor side electric wiring, refer to the indoor unit electric wiring diagram for servicing.
2.Use copper supply wires.
3.Symbols indicate, ▭ : Terminal block
⊙ : Connector

SYMBOL	NAME	SYMBOL	NAME	SYMBOL	NAME
CN61	CONNECTOR	LEV	EXPANSION VALVE COIL	RT65	AMBIENT TEMP. THERMISTOR
C61, C62, C63	SMOOTHING CAPACITOR	L61	REACTOR	RT68	OUTDOOR HEAT EXCHANGER TEMP. THERMISTOR
DB61, DB65	DIODE MODULE	MC	COMPRESSOR	TB1	TERMINAL BLOCK
F61	FUSE (25A 250V)	MF	FAN MOTOR	T801	TRANSFORMER
F62	FUSE (15A 250V)	PTC64, PTC65	CIRCUIT PROTECTION	X63, X64	RELAY
F701, F801, F901	FUSE (T3.15AL250V)	Q821	SWITCHING POWER TRANSISTOR	21S4	REVERSING VALVE COIL
IC700, IC932	POWER MODULE	R161	DEFROST THERMISTOR		
IC802	POWER DEVICE	RT62	DISCHARGE TEMP. THERMISTOR		
LED	LED	RT64	FIN TEMP. THERMISTOR		

Safety Precautions in Servicing Electrical Parts

Before performing inspection and repairs, be sure to confirm that the voltage of the smoothing capacitor is less than 10V DC between its plus (+) and minus (−) terminals when measured with a tester ten minutes after the power has been turned off.

Since the electrolytic capacitor used for the inverter is usually charged with 325V DC voltage, and the electric charge remains for a while after the power is cut, the shock would be given if contacted its charging part (not only the electrolytic capacitor), resulting sometimes in serious injury.

In case the residual voltage of the electrolytic capacitor mentioned above exceeds 10V DC, connect the plus (+) and minus (−) terminals with either a discharge resistor (approx. 100Ω, 40W) or a soldering iron plug to let the electric charge discharge.

One Point Checking for Inverter

	Item	Symptom	Corresponds
①	Power supply	No 230V AC between S1 and S2 of TERMINAL BLOCK	The check of wiring of connecting the indoor unit and outdoor unit.
②	Fuse	Blown	Replace the INVERTER P.C. BOARD
③	Power for main circuit	No 325V DC between P and N of IC700	Replace the INVERTER P.C. BOARD
④	Inverter output	Voltages (AC) between wires (U, V, W) differ when the unit is operated with CN61 disconnected	1.Check the connector is connected certainly 2.Replace the INVERTER P.C. BOARD
⑤	LED display (In case that compressor is not in operation)	Lit	Normal
		Blinking	Abnormal or protective shutdown (Refer to "Troubleshootings When LED blinks" mentioned in right)
		Goes out	Replace the INVERTER P.C. BOARD

Troubleshootings When LED blinks

When the compressor stops due to protective functions, the LED blinks on the outdoor INVERTER P.C. BOARD. Perform the inspection referring to the table below. For your reference, when the LED is lit, the unit is in normal operation. When the LED goes out, run the unit in the emergency operation and check the blinking frequency of LED.

Blinking frequency of LED on the INVERTER P.C. BOARD in the outdoor unit	Troubleshooting: Symptom	Troubleshooting: Corresponds
Once	Abnormality in outdoor power supply system	1.Check outdoor INVERTER P.C. BOARD 2.Reconnect compressor connector 3.Check compressor 4.Check stop valve
Once	Abnormality in outdoor thermistor	Check thermistor including poor contact or disconnection of its connector
Once	Abnormality in outdoor control system	Check outdoor INVERTER P.C. BOARD
Twice	Protection for overcurrent	1.Check outdoor INVERTER P.C. BOARD 2.Reconnect compressor connector 3.Check compressor 4.Check stop valve
3 times	Protection for overheat of discharge temperature	1.Charge refrigerant 2.Check expansion valve
4 times	Protection for overheat of fin temperature/INVERTER P.C. BOARD temperature	1.Check air circulation in outdoor unit (Short cycle) 2.Check outdoor fan motor 3.Check obstruction in air inlet/outlet of outdoor unit
5 times	Protection for raising of high pressure	1.Check refrigerant circuit (Clogging, etc.) 2.Check stop valve
6 times	Abnormality of serial signal	Check INDOOR ELECTRONIC CONTROL P.C. BOARD and outdoor INVERTER P.C. BOARD
8 times	Abnormality of compressor synchronism	1.Reconnect compressor connector 2.Check compressor 3.Check outdoor INVERTER P.C. BOARD
10 times	Abnormality of outdoor fan motor	1.Reconnect connectors for fan motor 2.Check outdoor INVERTER P.C. BOARD 3.Check outdoor fan motor
11 times	Protection for stop valve (Closed valve)	Check stop valve
12 times	Abnormality of compressor phase current	Check outdoor INVERTER P.C. BOARD
13 times	Abnormality of DC voltage	Check outdoor INVERTER P.C. BOARD
16 times	Abnormality of reversing valve	1.Check reversing valve 2.Check outdoor INVERTER P.C. BOARD
16 times	Abnormality in refrigerant system	Refer to SERVICE MANUAL

The blinking frequency shows the number of times the LED blinks after every 2.5-second OFF.
(Example) When the blinking frequency is "twice"

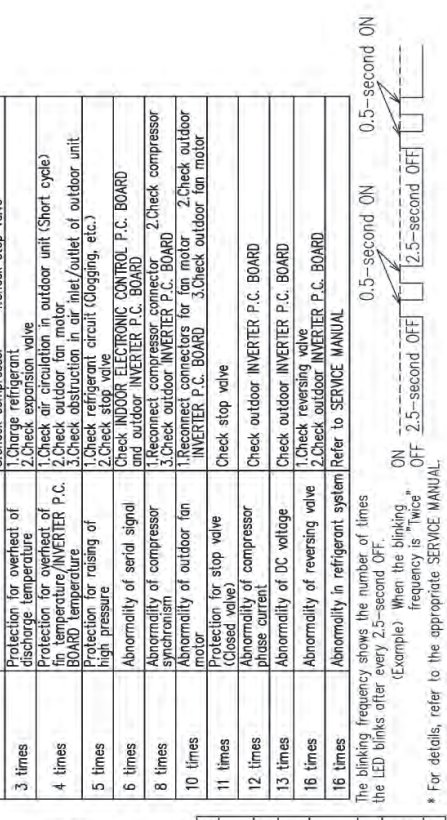

* For details, refer to the appropriate SERVICE MANUAL.

SUZ-M50VA

OUTDOOR UNIT

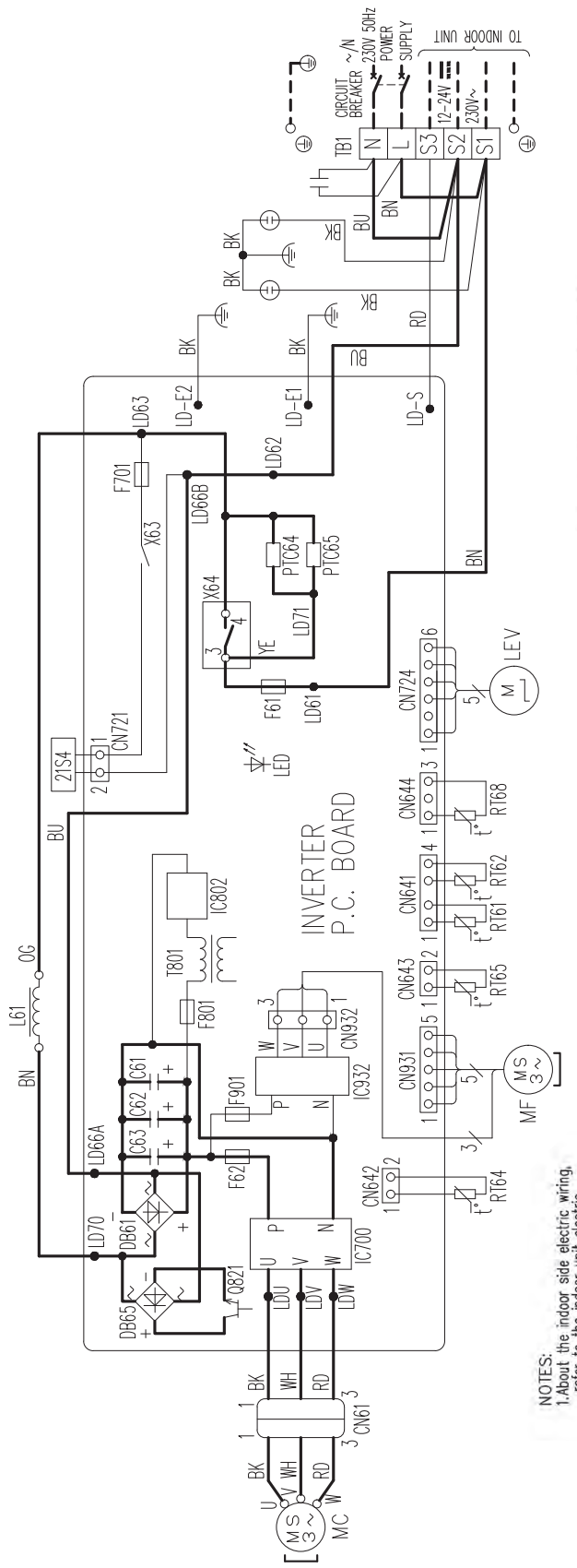

NOTES:
1. About the indoor side electric wiring, refer to the indoor unit electric wiring diagram for servicing.
2. Use copper supply wires.
3. Symbols indicate, ▭▭▭▭ : Terminal block
   ▭▭▭▭ : Connector

SYMBOL	NAME	SYMBOL	NAME	SYMBOL	NAME
CN61	CONNECTOR	LEV	EXPANSION VALVE COIL	RT65	AMBIENT TEMP. THERMISTOR
C61, C62, C63	SMOOTHING CAPACITOR	L61	REACTOR	RT68	OUTDOOR HEAT EXCHANGER TEMP. THERMISTOR
DB61, DB65	DIODE MODULE	MC	COMPRESSOR	TB1	TERMINAL BLOCK
F61	FUSE (25A 250V)	MF	FAN MOTOR	T801	TRANSFORMER
F62	FUSE (15A 250V)	PTC64, PTC65	CIRCUIT PROTECTION	X63, X64	RELAY
F701, F801, F901	FUSE (3.15AL250V)	Q821	SWITCHING POWER TRANSISTOR	21S4	REVERSING VALVE COIL
IC700, IC932	POWER MODULE	RT61	DEFROST THERMISTOR		
IC802	POWER DEVICE	RT62	DISCHARGE TEMP. THERMISTOR		
LED	LED	RT64	FIN TEMP. THERMISTOR		

Safety Precautions in Servicing Electrical Parts

Before performing inspection and repairs, be sure to confirm that the voltage of the smoothing capacitor is less than 10V DC between its plus (+) and minus (−) terminals when measured with a tester ten minutes after the power has been turned off.

Since the electrolytic capacitor used for the inverter is usually charged with 325V DC voltage, and the electric charge remains for a while after the power is cut, the shock would be given if contacted its charging part (not only the electrolytic capacitor), resulting sometimes in serious injury.

In case the residual voltage of the electrolytic capacitor mentioned above exceeds 10V DC, connect the plus (+) and minus (−) terminals with either a discharge resistor (approx. 100Ω, 40W) or a soldering iron plug to let the electric charge discharge.

One Point Checking for Inverter

Item	Symptom	Corresponds
① Power supply	No 230V AC between S1 and S2 of TERMINAL BLOCK	The check of wiring of connecting the indoor unit and outdoor unit
② Fuse	Blown	Replace the INVERTER P.C. BOARD
③ Power for main circuit	No 325 VDC between P and N of IC700	Replace the INVERTER P.C. BOARD
④ Inverter output	Voltages (AC) between wires (U, V, W) differ when the unit is operated with CN61 disconnected	1. Check the connector is connected certainly 2. Replace the INVERTER P.C. BOARD
⑤ LED display (In case that compressor is not in operation)	Lit	Normal
	Blinking	Abnormal or protective shutdown (Refer to "Troubleshootings When LED blinks" mentioned in right)
	Goes out	Replace the INVERTER P.C. BOARD

Troubleshootings When LED blinks

When the compressor stops due to protective functions, the LED blinks on the outdoor INVERTER P.C. BOARD. Perform the inspection referring to the table below. For your reference, when the LED is lit, the unit is in normal operation. When the LED goes out, run the unit in the emergency operation and check the blinking frequency of LED.

Blinking frequency of LED on the INVERTER P.C. BOARD in the outdoor unit	Troubleshooting	
	Symptom	Corresponds
Once	Abnormality in outdoor power supply system	1. Check outdoor INVERTER P.C. BOARD 2. Reconnect compressor connector 3. Check compressor 4. Check stop valve
Once	Abnormality in outdoor thermistor	Check thermistor including poor contact or disconnection of its connector
Once	Abnormality in outdoor control system	Check outdoor INVERTER P.C. BOARD
Twice	Protection for overcurrent	1. Check outdoor INVERTER P.C. BOARD 2. Reconnect compressor connector 3. Check compressor 4. Check stop valve
3 times	Protection for overheat of discharge temperature	1. Charge refrigerant 2. Check expansion valve
4 times	Protection for overheat of fin temperature/INVERTER P.C. BOARD temperature	1. Check air circulation in outdoor unit (Short cycle) 2. Check outdoor fan motor 3. Check obstruction in air inlet/outlet of outdoor unit
5 times	Protection for rising of high pressure	1. Check refrigerant circuit (Clogging, etc.) 2. Check stop valve
6 times	Abnormality of serial signal	Check INDOOR ELECTRONIC CONTROL P.C. BOARD or outdoor INVERTER P.C. BOARD
8 times	Abnormality of compressor synchronism	1. Reconnect compressor connector 2. Check compressor 3. Check outdoor INVERTER P.C. BOARD
10 times	Abnormality of outdoor fan motor	1. Reconnect connectors for fan motor 2. Check outdoor INVERTER P.C. BOARD 3. Check outdoor fan motor
11 times	Protection for stop valve (Closed valve)	Check stop valve
12 times	Abnormality of compressor phase current	Check outdoor INVERTER P.C. BOARD
13 times	Abnormality of DC voltage	Check outdoor INVERTER P.C. BOARD
16 times	Abnormality of reversing valve	1. Check reversing valve 2. Check outdoor INVERTER P.C. BOARD
16 times	Abnormality in refrigerant system	Refer to SERVICE MANUAL

The blinking frequency shows the number of times the LED blinks after every 2.5-second OFF.
(Example) When the blinking frequency is "twice"

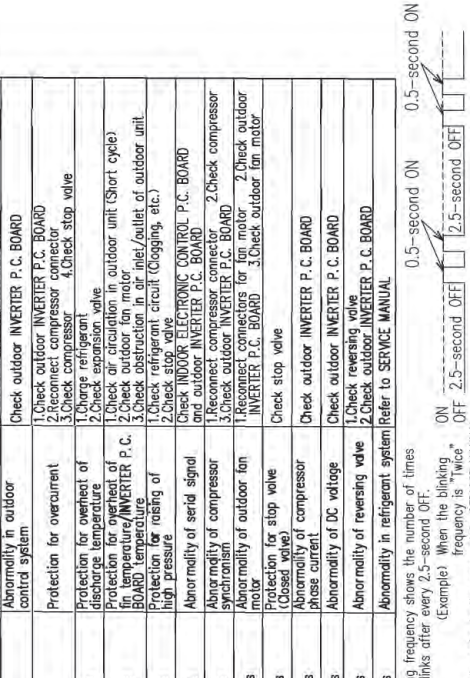

* For details, refer to the appropriate SERVICE MANUAL.

SUZ-M60VA
SUZ-M71VA

OUTDOOR UNIT

OUTDOOR UNIT WIRING DIAGRAM

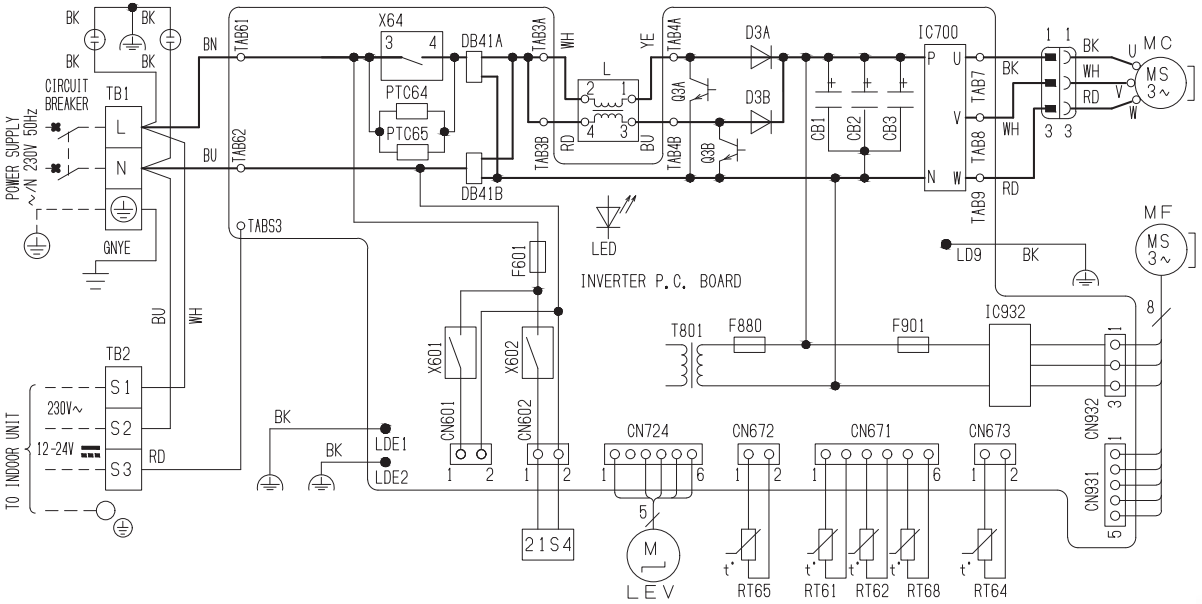

SYMBOL	NAME	SYMBOL	NAME	SYMBOL	NAME	SYMBOL	NAME
CB1, CB2, CB3	SMOOTHING CAPACITOR	L	REACTOR	RT61	DEFROST THERMISTOR	T801	TRANSFORMER
DB41A, DB41B	DIODE MODULE	LED	LED	RT62	DISCHARGE TEMP. THERMISTOR	X64	RELAY
D3A, D3B	DIODE	LEV	EXPANSION VALVE COIL	RT64	FIN TEMP. THERMISTOR	X601, X602	RELAY
F601	FUSE (T3. 15AL250V)	MC	COMPRESSOR	RT65	AMBIENT TEMP. THERMISTOR	21S4	REVERSING VALVE COIL
F880	FUSE (T3. 15AL250V)	MF	FAN MOTOR	RT68	OUTDOOR HEAT EXCHANGER TEMP. THERMISTOR		
F901	FUSE (T3. 15AL250V)	PTC64, PTC65	CIRCUIT PROTECTION				
IC700, IC932	POWER MODULE	Q3A, Q3B	SWITCHING POWER TRANSISTOR	TB1, TB2	TERMINAL BLOCK		

NOTES 1. About the indoor side electric wiring, refer to the indoor unit electric wiring diagram for servicing.
2. Use copper supply wires. 3. Symbols indicate, □□□ :Terminal block ○○○ :Connector

(One Point Checking for Inverter)

	Item	Symptom	Corresponds
①	Power supply	No 230V AC between S1 and S2 of TERMINAL BLOCK	The check of wiring of connecting the indoor unit and outdoor unit
②	Fuse	Blown	Replace the INVERTER P.C. BOARD
③	Power for main circuit	No 325 VDC between P and N of IC700	Replace the INVERTER P.C. BOARD
④	Inverter output	voltages (AC) between wires (U, V, W) differ when the unit is operated with CN61 disconnected	1. Check the connector is connected certainly 2. Replace the INVERTER P.C. BOARD
⑤	LED display (In case that compressor is not in operation)	Lit	Normal
		Blinking	Abnormal or protective shutdown (Refer to "Troubleshootings When LED blinks" mentioned in right)
		Goes out	Replace the INVERTER P.C. BOARD

(Troubleshootings When LED blinks)

When the compressor stops due to protective functions, the LED blinks on the outdoor INVERTER P.C. BOARD. Perform the inspection referring to the table below. For your reference, when the LED is lit, the unit is in normal operation. When the LED goes out, run the unit in the emergency operation and check the blinking frequency of LED

Blinking frequency of LED on the INVERTER P.C. BOARD in the outdoor unit	Troubleshooting	
	Symptom	Corresponds
Once	Abnormality in outdoor power supply system	1. Check outdoor INVERTER P.C. BOARD 2. Reconnect compressor connector 3. Check compressor 4. Check stop valve
Once	Abnormality in outdoor thermistor	Check thermistor including poor contact or disconnection of its connector
Once	Abnormality in outdoor control system	Check outdoor INVERTER P.C. BOARD
Twice	Protection for overcurrent	1. Check outdoor INVERTER P.C. BOARD 2. Reconnect compressor connector 3. Check compressor 4. Check stop valve
3 times	Protection for overheat of discharge temperature	1. Charge refrigerant 2. Check expansion valve
4 times	Protection for overheat of fin temperature/INVERTER P.C. BOARD temperature	1. Check air circulation in outdoor unit (Short cycle) 2. Check outdoor fan motor 3. Check obstruction in air inlet/outlet of outdoor unit
5 times	Protection for raising of high pressure	1. Check refrigerant circuit (Clogging, etc.) 2. Check stop valve
6 times	Abnormality of serial signal	Check INDOOR ELECTRONIC CONTROL P.C. BOARD and outdoor INVERTER P.C. BOARD
8 times	Abnormality of compressor synchronism	1. Reconnect compressor connector 2. Check compressor 3. Check outdoor INVERTER P.C. BOARD
10 times	Abnormality of outdoor fan motor	1. Reconnect connectors for fan motor 2. Check outdoor INVERTER P.C. BOARD 3. Check outdoor fan motor
11 times	Protection for stop valve (Closed valve)	Check stop valve
12 times	Abnormality of compressor phase current	Check outdoor INVERTER P.C. BOARD
13 times	Abnormality of DC voltage	Check outdoor INVERTER P.C. BOARD
16 times	Abnormality of reversing valve	1. Check reversing valve 2. Check outdoor INVERTER P.C. BOARD
16 times	Abnormality in refrigerant system	Refer to SERVICE MANUAL

The blinking frequency shows the number of times the LED blinks after every 2.5-second OFF.

(Example) When the blinking frequency is "Twice"

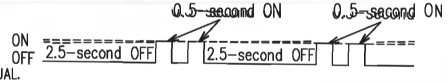

* For details, refer to the appropriate SERVICE MANUAL.

B.3.2.2 R410A type

SUZ-KA25VA6
SUZ-KA35VA6

OUTDOOR UNIT

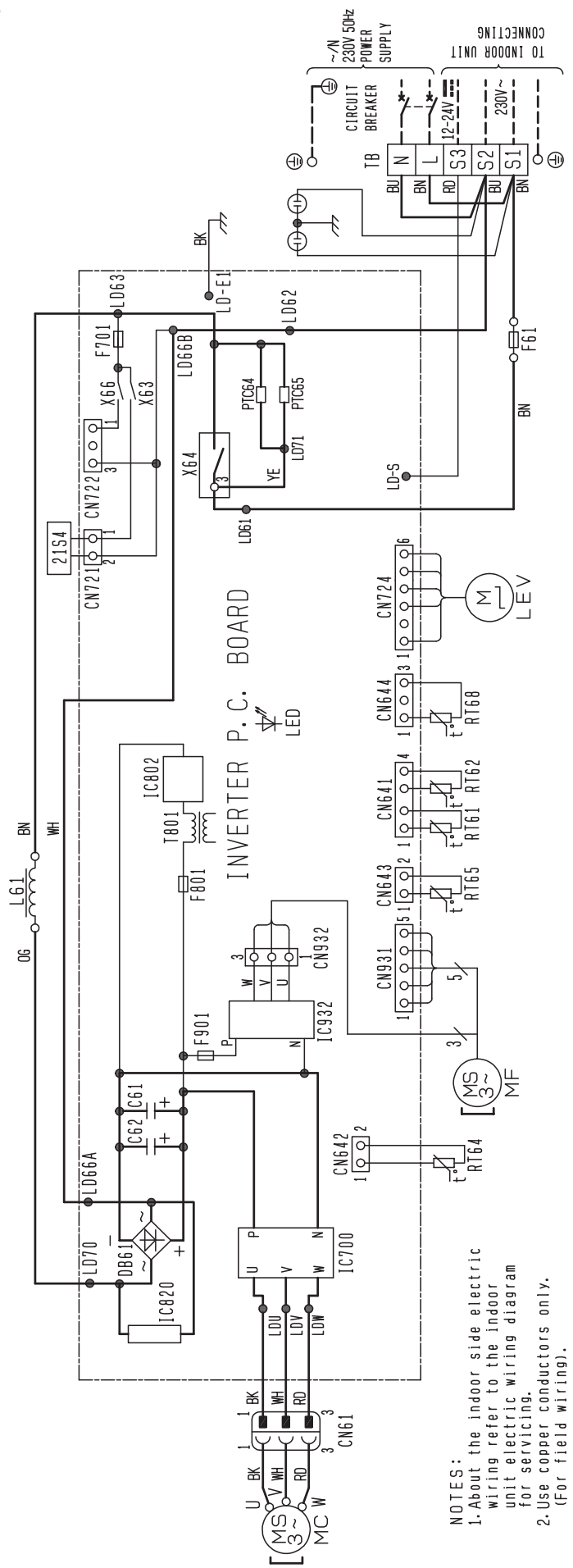

NOTES:
1. About the indoor side electric wiring refer to the indoor unit electric wiring diagram for servicing.
2. Use copper conductors only. (For field wiring).

SYMBOL	NAME	SYMBOL	NAME	SYMBOL	NAME
C61, C62	SMOOTHING CAPACITOR	L61	REACTOR	RT68	OUTDOOR HEAT EXCHANGER TEMP. THERMISTOR.
DB61	DIODE MODULE	MC	COMPRESSOR		
F61	FUSE (T20AL250V)	MF	FAN MOTOR	TB	TERMINAL BLOCK
F701, F801, F901	FUSE (T3.15AL250V)	PTC64, PTC65	CIRCUIT PROTECTION	T801	TRANSFORMER
IC700, IC820, IC932	POWER MODULE	RT61	DEFROST THERMISTOR	X63, X64, X66	RELAY
IC802	POWER DEVICE	RT62	DISCHARGE TEMP. THERMISTOR	21S4	REVERSING VALVE COIL
LED	LED	RT64	FIN TEMP. THERMISTOR		
LEV	EXPANSION VALVE COIL	RT65	AMBIENT TEMP. THERMISTOR		

SUZ-KA50VA6

OUTDOOR UNIT

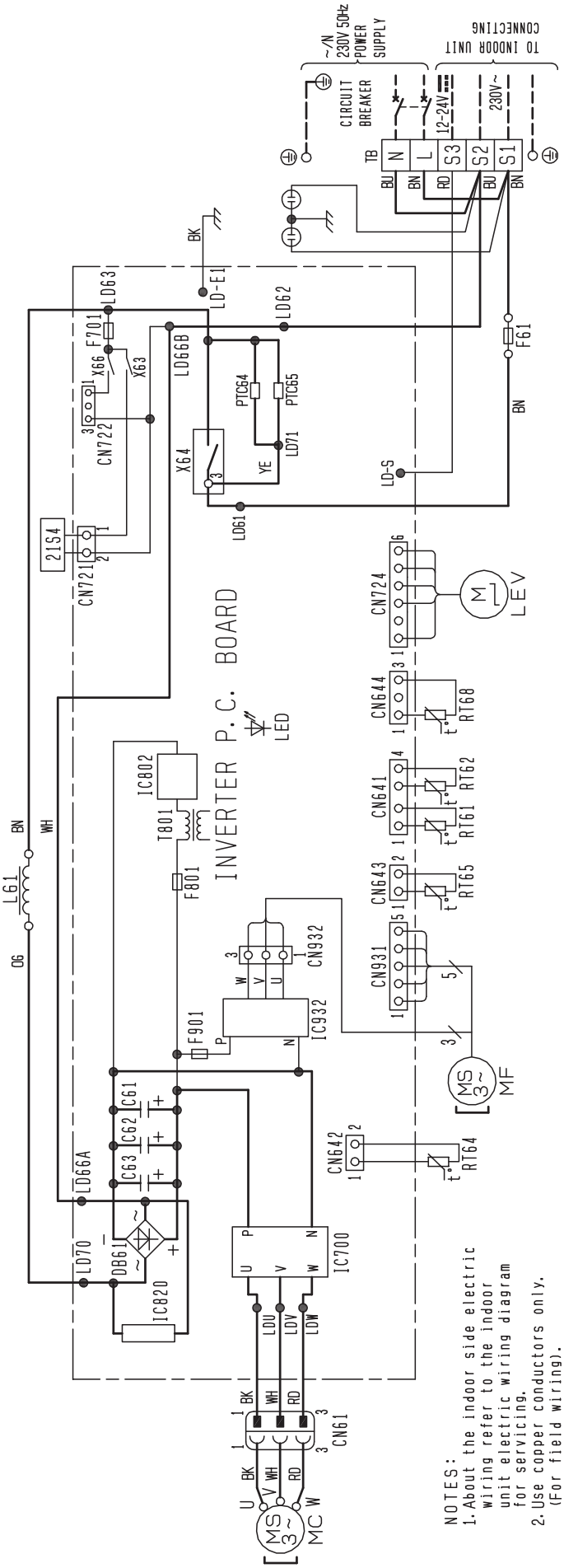

NOTES:
1. About the indoor side electric wiring refer to the indoor unit electric wiring diagram for servicing.
2. Use copper conductors only. (For field wiring).

SYMBOL	NAME	SYMBOL	NAME	SYMBOL	NAME
C61, C62, C63	SMOOTHING CAPACITOR	L61	REACTOR	RT68	OUTDOOR HEAT EXCHANGER TEMP. THERMISTOR.
DB61	DIODE MODULE	MC	COMPRESSOR		
F61	FUSE (T20AL250V)	MF	FAN MOTOR	TB	TERMINAL BLOCK
F701, F801, F901	FUSE (T3.15AL250V)	PTC64, PTC65	CIRCUIT PROTECTION	T801	TRANSFORMER
IC700, IC820, IC932	POWER MODULE	RT61	DEFROST THERMISTOR	X63, X64, X66	RELAY
IC802	POWER DEVICE	RT62	DISCHARGE TEMP. THERMISTOR	21S4	REVERSING VALVE COIL
LED	LED	RT64	FIN TEMP. THERMISTOR		
LEV	EXPANSION VALVE COIL	RT65	AMBIENT TEMP. THERMISTOR		

SUZ-KA60VA6
SUZ-KA71VA6

OUTDOOR UNIT

SYMBOL	NAME	SYMBOL	NAME
CB1～3	SMOOTHING CAPACITOR	PTC65	CIRCUIT PROTECTION
F601	FUSE(T3.15AL250V)	RT61	DEFROST THERMISTOR
F62	FUSE(T2AL250V)	RT62	DISCHARGE TEMP.THERMISTOR
F880	FUSE(T3.15AL250V)	RT64	FIN TEMP.THERMISTOR
F901	FUSE(T3.15AL250V)	RT65	AMBIENT TEMP.THERMISTOR
IC932	INTELLIGENT POWER MODULE	RT68	OUTDOOR HEAT EXCHANGER TEMP.THERMISTOR
IPM	INTELLIGENT POWER MODULE		
L	REACTOR	TB1,TB2	TERMINAL BLOCK
LEV	EXPANSION VALVE COIL	T801	TRANSFORMER
MC	COMPRESSOR	X601	RELAY
MF	FAN MOTOR	X602	RELAY
PFC	POWER FACTOR CONTROLLER	X64	RELAY
PTC64	CIRCUIT PROTECTION	21S4	REVERSING VALVE SOLENOID COIL

NOTES 1. About the indoor side electric wiring, refer to the indoor unit electric wiring diagram for servicing.
2. Use copper conductors only(for field wiring).
3. Symbols indicate. □□□:Terminal block

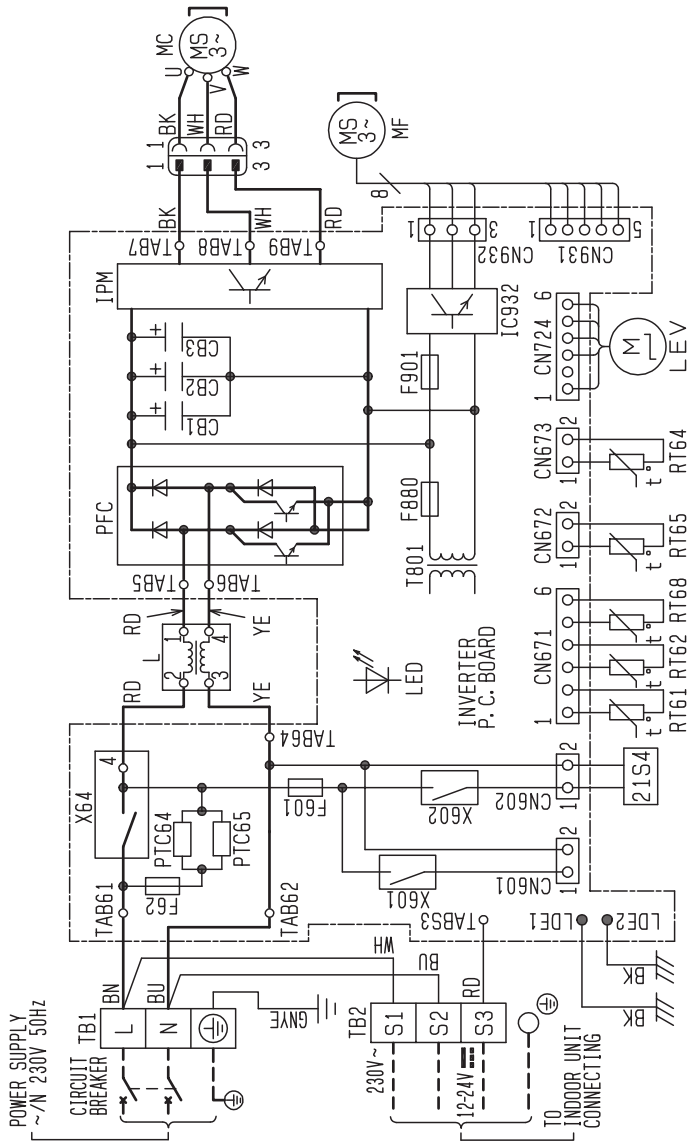

B.3.3 REFRIGERANT SYSTEM DIAGRAM

B.3.3.1 R32 type

SUZ-M25VA
SUZ-M35VA

Unit: mm

OUTDOOR UNIT

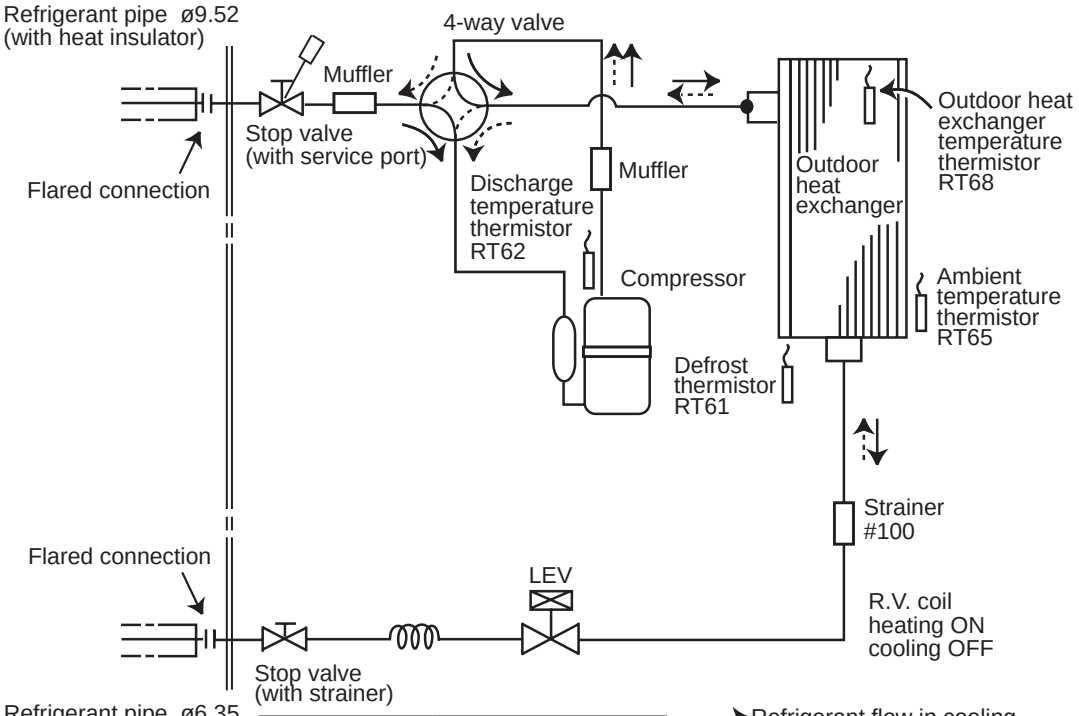

Capillary tube	
SUZ-M25VA	Φ4.0×Φ2.4×240
SUZ-M35VA	Φ3.0×Φ2.0×240

SUZ-M50VA

Unit: mm

OUTDOOR UNIT

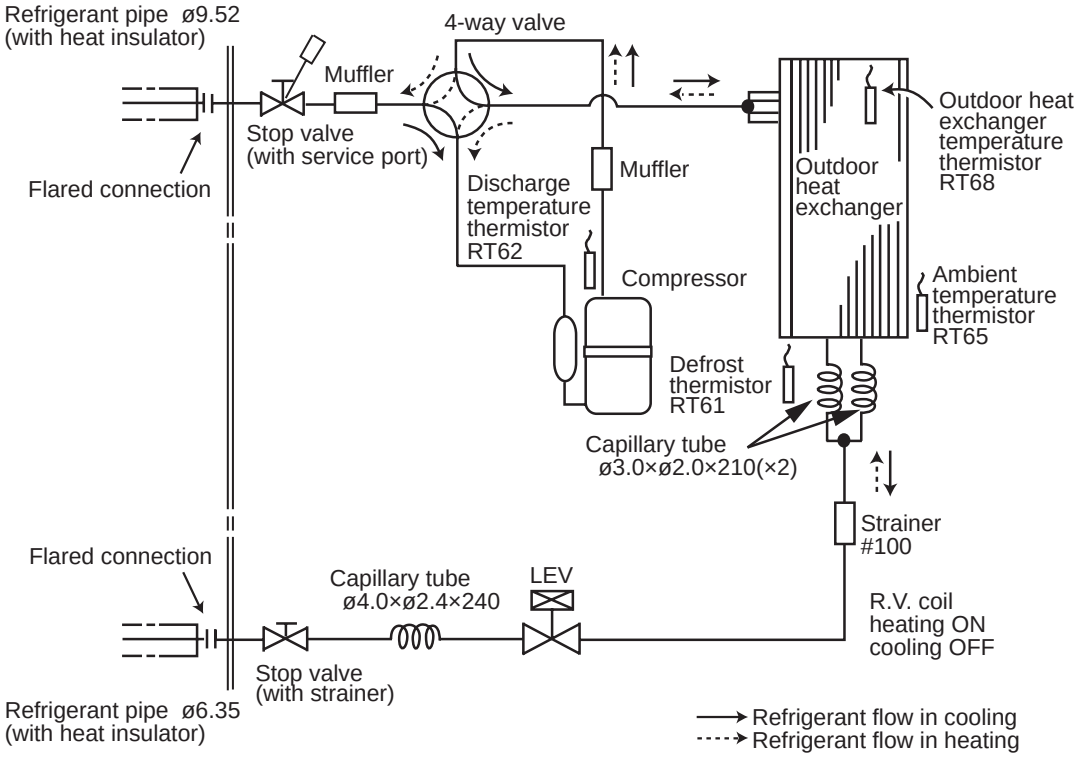

SUZ-M60VA
SUZ-M71VA

Unit: mm

OUTDOOR UNIT

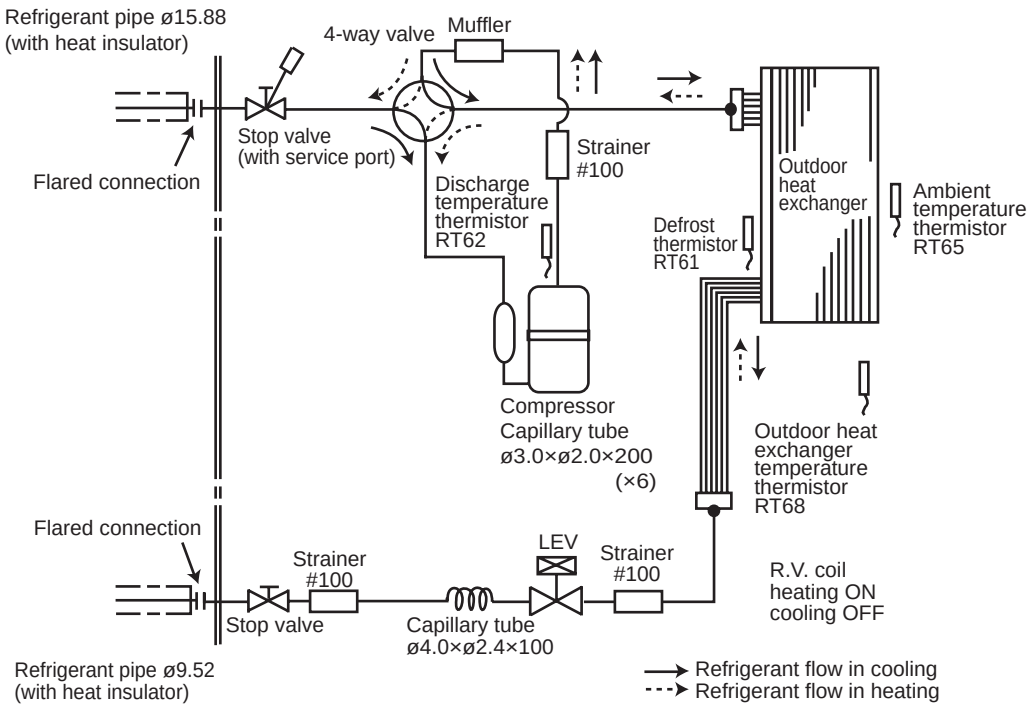

MAX.REFRIGERANT PIPING LENGTH

Model	Refrigerant piping:m		Refrigerant piping:m	
	Max.LengthA	Max.Height difference B	Gas	Liguid
SUZ-M25VA	20	12	9.52	6.35
SUZ-M35VA				
SUZ-M50VA	30	30	12.7	
SUZ-M60VA			15.88	
SUZ-M71VA				9.52

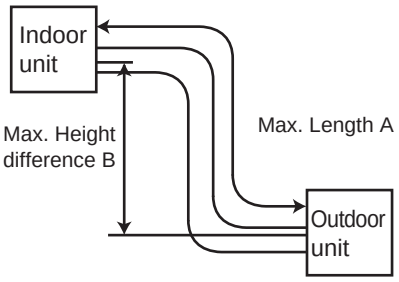

ADDITINAL REFRIGERANT CHARGE(R32:g)

Model	Out door unit precharged	Refrigerant piping length			
		7m	10m	15m	20m
SUZ-M25VA	650	0	60	160	260
SUZ-M35VA	900	0	60	160	260

Calculation:xg=30g/mx(Refrigerant piping leng(m) -7)

Model	Out door unit precharged	Refrigerant piping length					
		7m	10m	15m	20m	25m	30m
SUZ-M50VA	1,200	0	60	160	260	360	460
SUZ-M60VA	1,250	0	60	160	260	360	460

Calculation:xg=20g/mx(Refrigerant piping leng(m) -7)

Model	Out door unit precharged	Refrigerant piping length					
		7m	10m	15m	20m	25m	30m
SUZ-M71VA	1,450	0	120	320	520	720	920

Calculation:xg=55g/mx(Refrigerant piping leng(m) -7)

B.3.3.2 R410A type

SUZ-KA25VA6

Unit: mm

OUTDOOR UNIT

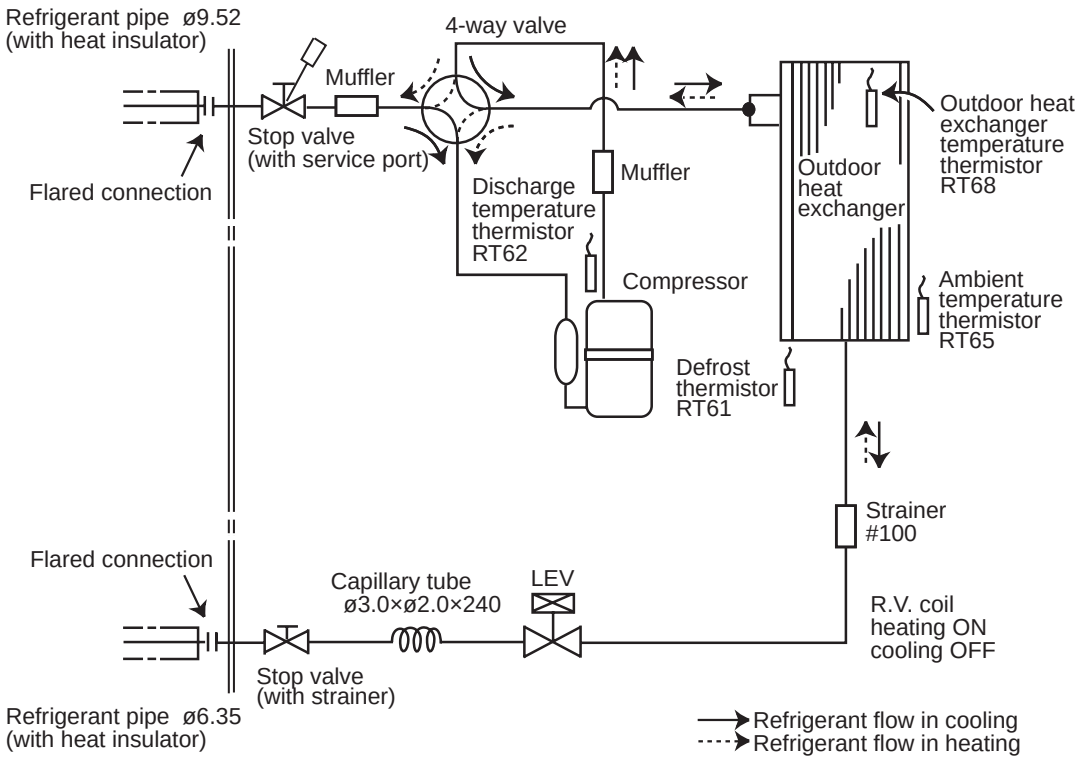

SUZ-KA35VA6

Unit: mm

OUTDOOR UNIT

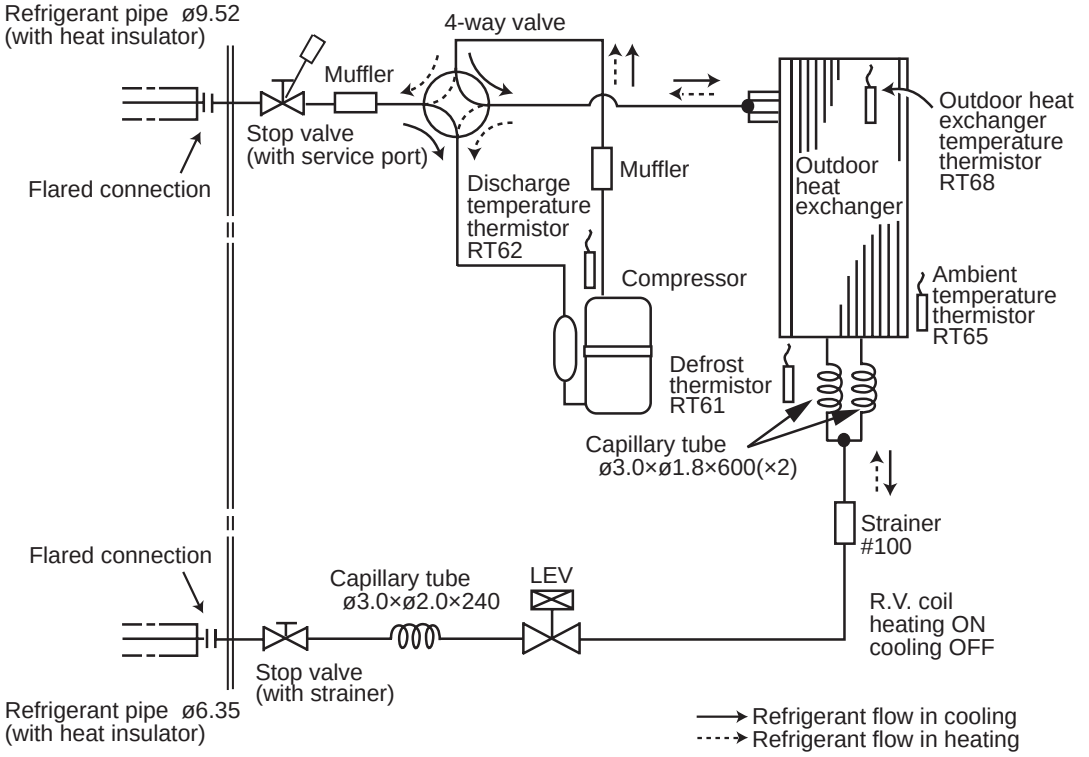

SUZ-KA50VA6

Unit: mm

OUTDOOR UNIT

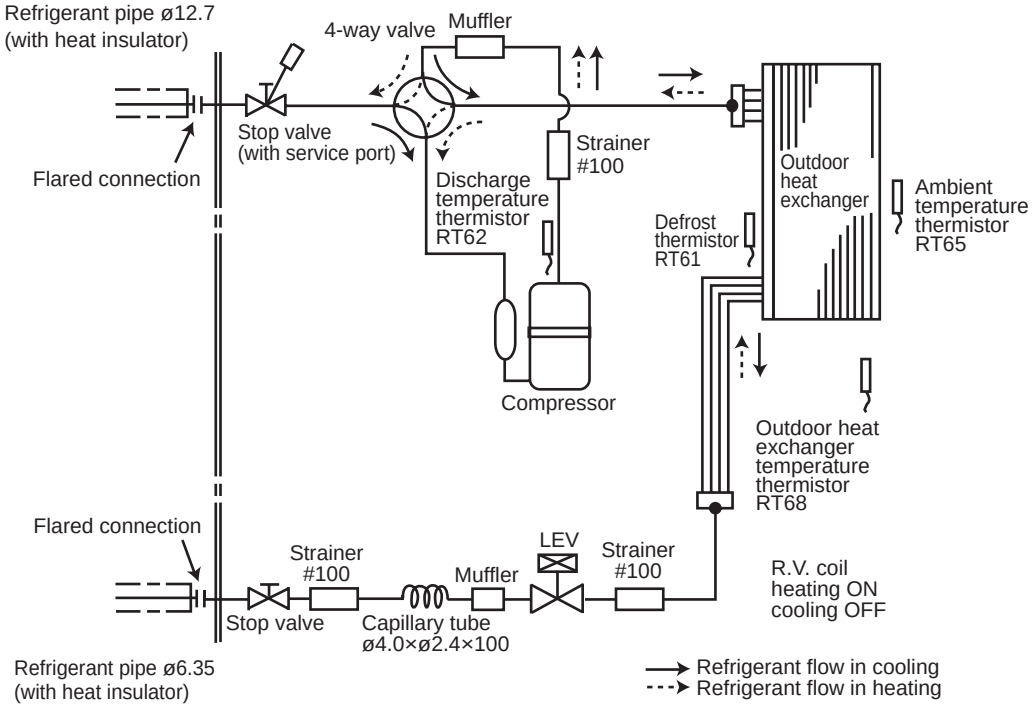

SUZ-KA60VA6

Unit: mm

OUTDOOR UNIT

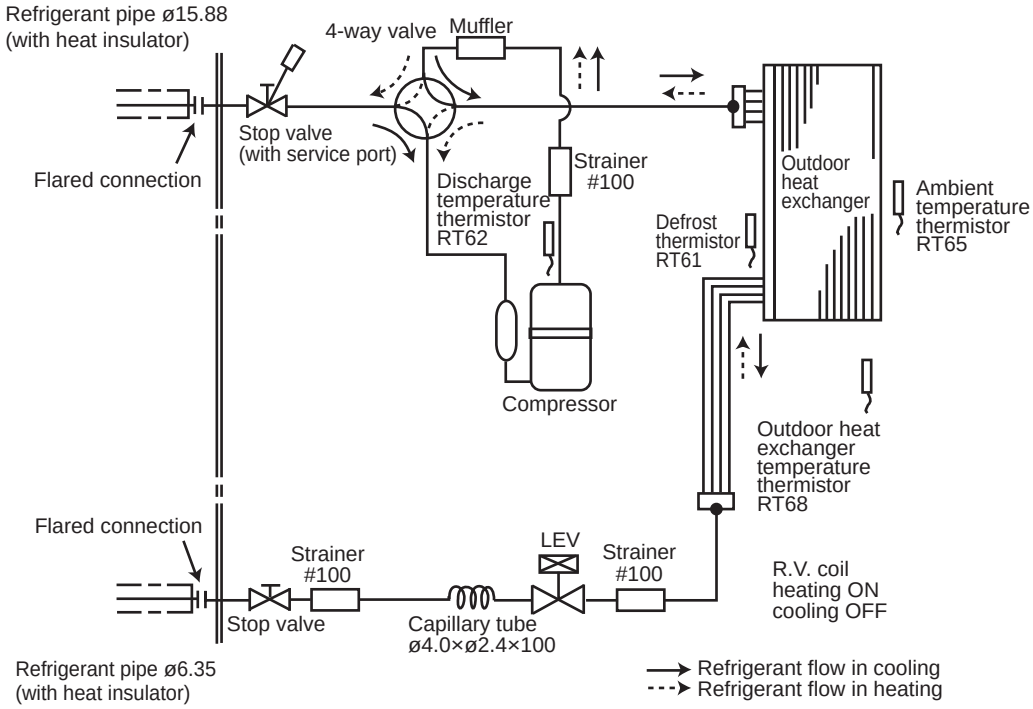

SUZ-KA71VA6

Unit: mm

OUTDOOR UNIT

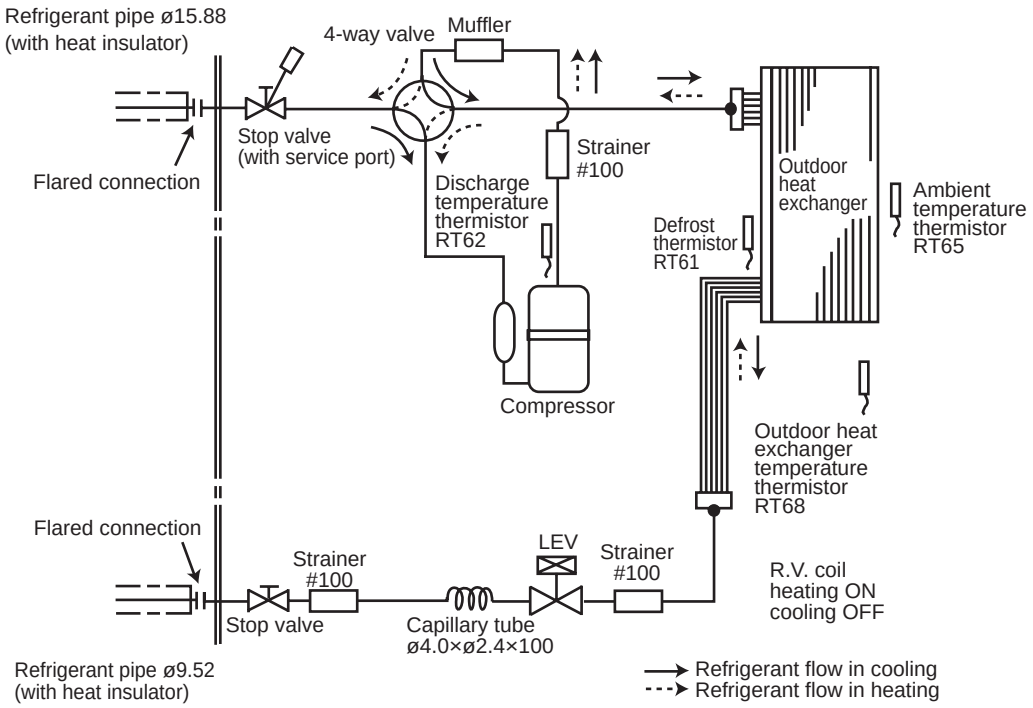

MAX.REFRIGERANT PIPING LENGTH

Model	Refrigerant piping:m		Refrigerant piping:m	
	Max.LengthA	Max.Height difference B	Gas	Liguid
SUZ-KA25VA6	20	12	9.52	6.35
SUZ-KA35VA6				
SUZ-KA50VA6	30	30	12.7	
SUZ-KA60VA6			15.88	
SUZ-KA71VA6				9.52

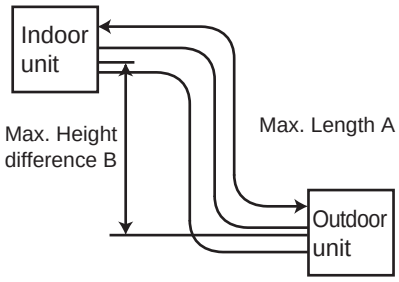

ADDITINAL REFRIGERANT CHARGE(R32:g)

Model	Out door unit precharged	Refrigerant piping length									
		7m	8m	9m	10m	11m	12m	13m	14m	15m	20m
SUZ-KA25VA6	800	0	30	60	90	120	150	180	210	240	390
SUZ-KA35VA6	1,150	0	30	60	90	120	150	180	210	240	390

Calculation:xg=20g/mx(Refrigerant piping leng(m) -7)

Model	Out door unit precharged	Refrigerant piping length					
		7m	10m	15m	20m	25m	30m
SUZ-M50VA	1,600	0	60	160	260	360	460
SUZ-M60VA	1,600	0	60	160	260	360	460

Calculation:xg=20g/mx(Refrigerant piping leng(m) -7)

Model	Out door unit precharged	Refrigerant piping length					
		7m	10m	15m	20m	25m	30m
SUZ-KA71VA6	1,800	0	165	440	715	990	1,265

Calculation:xg=55g/mx(Refrigerant piping leng(m) -7)

B.3.4 PERFORMANCE CURVES

B.3.4.1 R32 type

FOR THE COMBINATION OF OUTDOOR UNIT

SUZ-M25VA SUZ-M35VA SUZ-M50VA SUZ-M60VA SUZ-M71VA

Cooling capacity

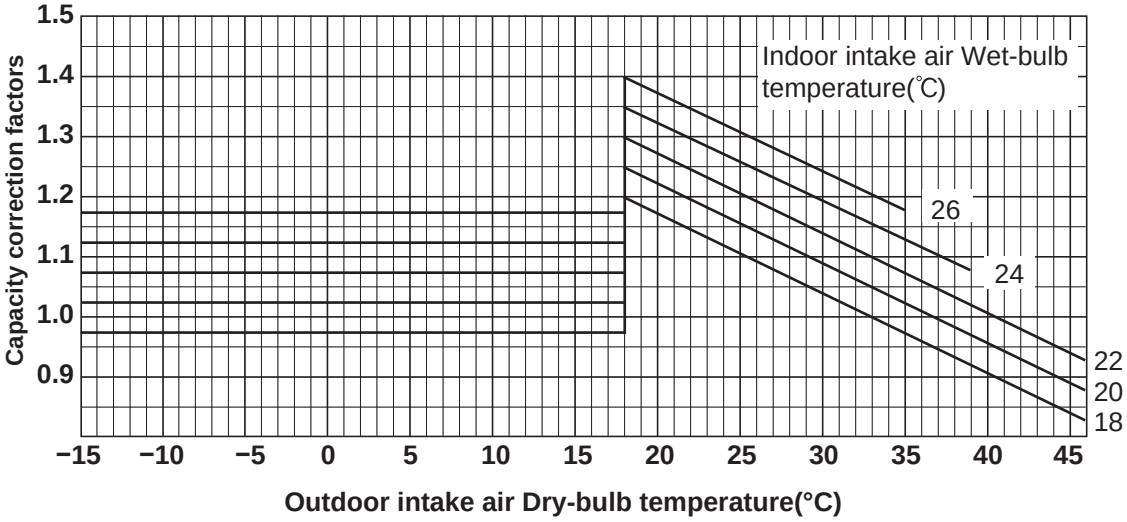

Total input (Cooling)

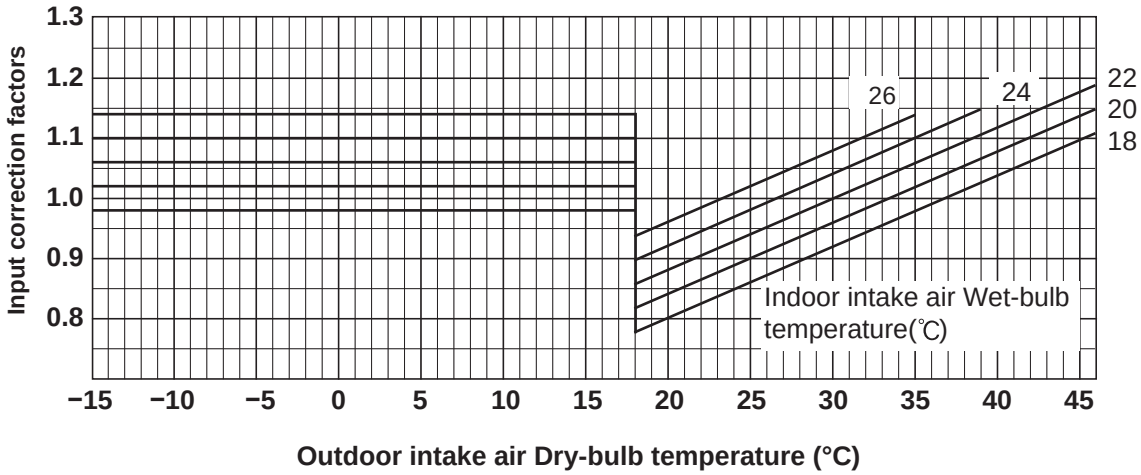

Lower limit of guaranteed operating range in cooling
SUZ-M25,35VA:−10°C
SUZ-M50,60,71VA: −15°C

FOR THE COMBINATION OF OUTDOOR UNIT
SUZ-M25VA SUZ-M35VA SUZ-M50VA SUZ-M60VA SUZ-M71VA

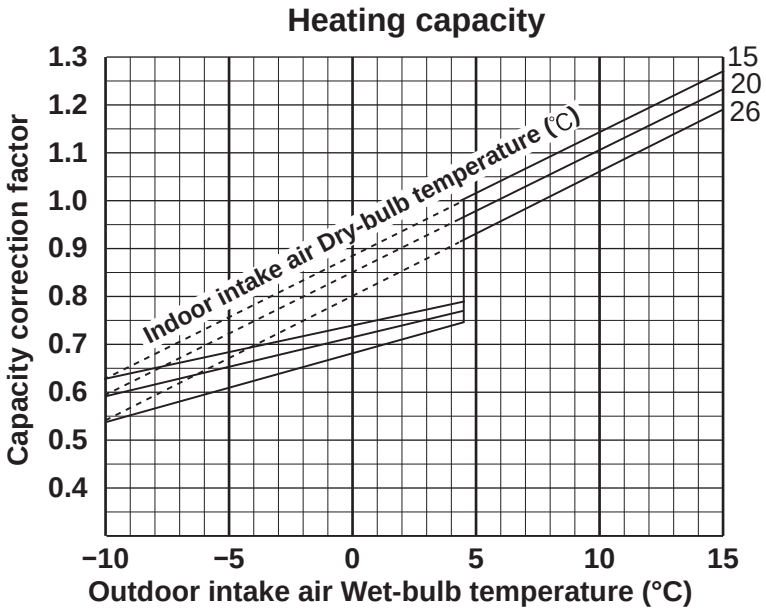

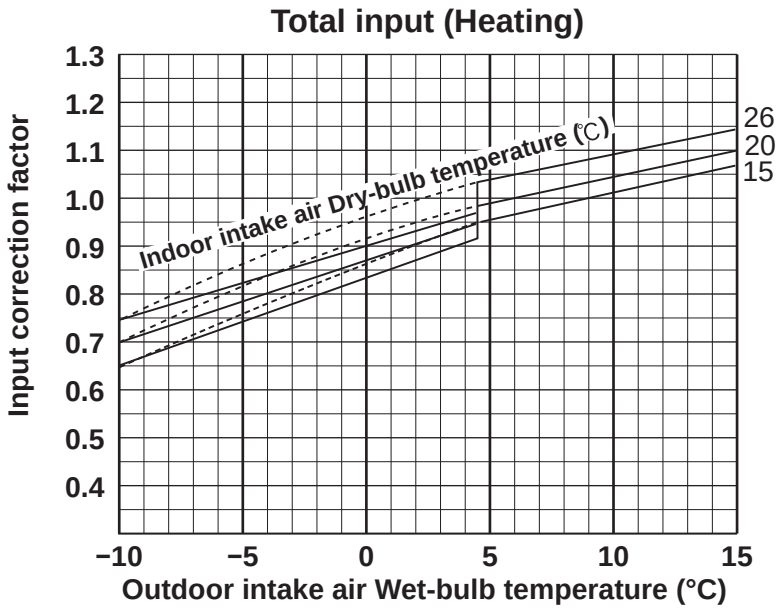

B.3.4.2 R410A type

FOR THE COMBINATION OF OUTDOOR UNIT

SUZ-KA25VA6 SUZ-KA35VA6 SUZ-KA50VA6 SUZ-KA60VA6 SUZ-KA71VA6

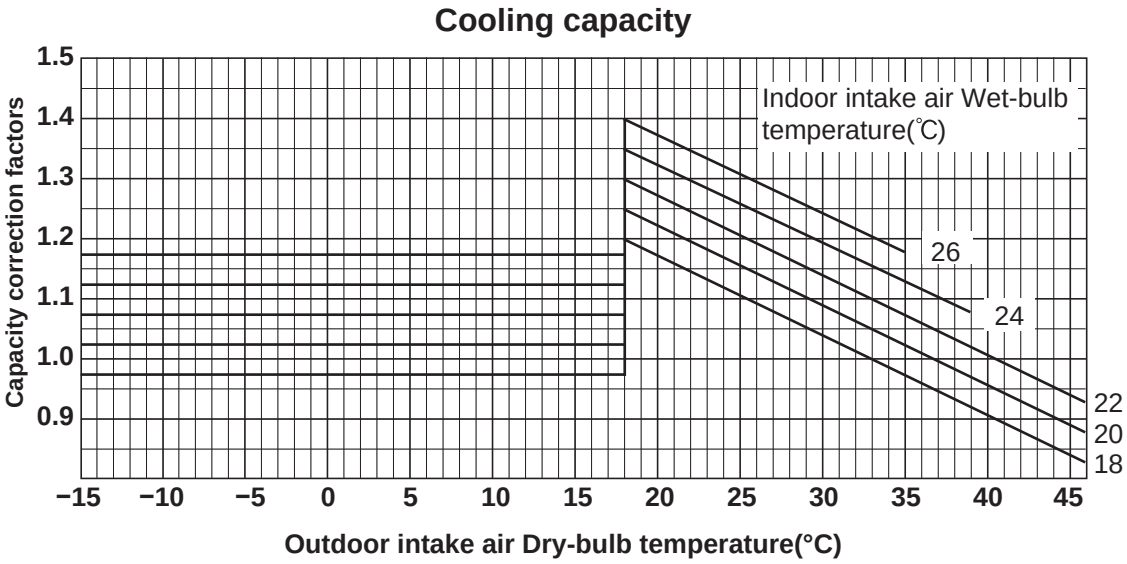

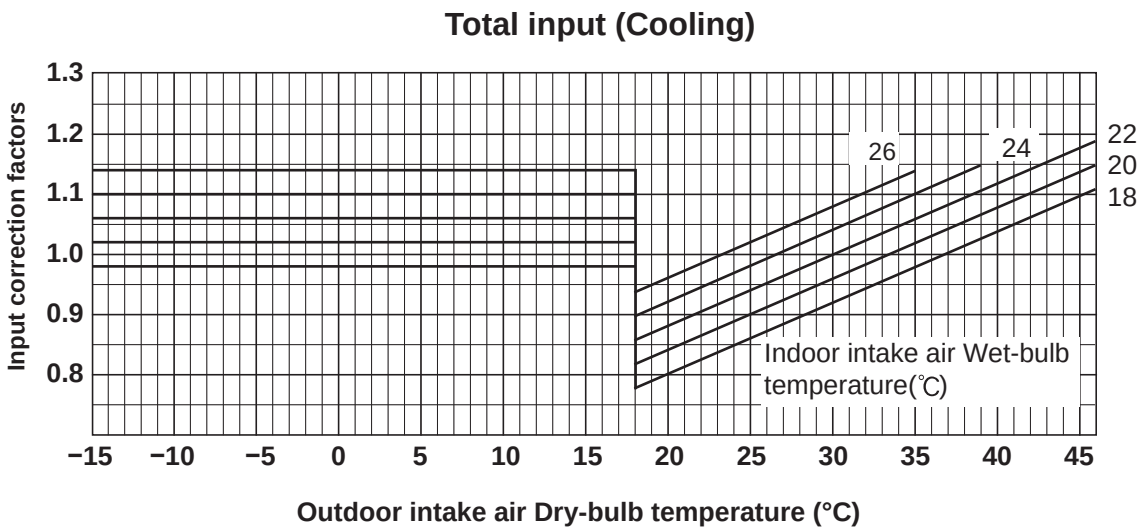

Lower limit of guaranteed operating range in cooling
SUZ-KA25,35VA6:−10°C
SUZ-KA50,60,71VA6: −15°C

FOR THE COMBINATION OF OUTDOOR UNIT
SUZ-KA25VA6 SUZ-KA35VA6 SUZ-KA50VA6 SUZ-KA60VA6 SUZ-KA71VA6

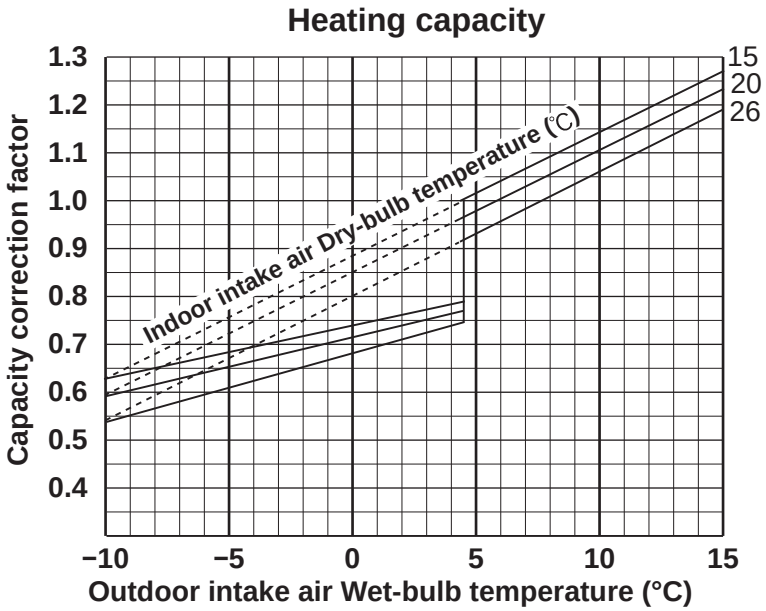

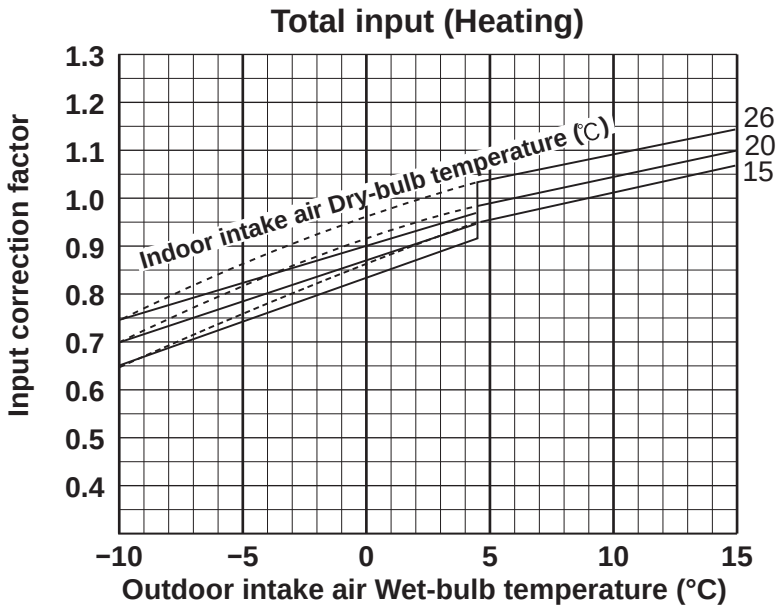

B.3.5 NOISE CRITERIA CURVES

B.3.5.1 R32 type

SUZ-M25VA

FAN SPEED	FUNCTION	SPL(dB(A))	LINE
High Med.	COOLING	45	●——●
	HEATING	46	○——○

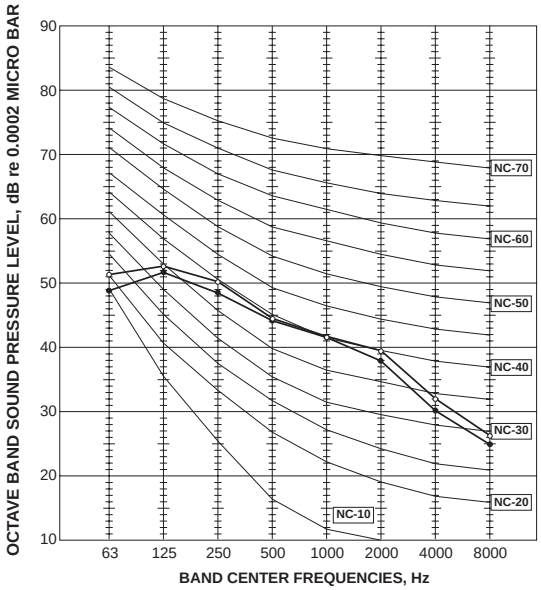

SUZ-M35VA

FAN SPEED	FUNCTION	SPL(dB(A))	LINE
High Med.	COOLING	48	●——●
	HEATING	48	○——○

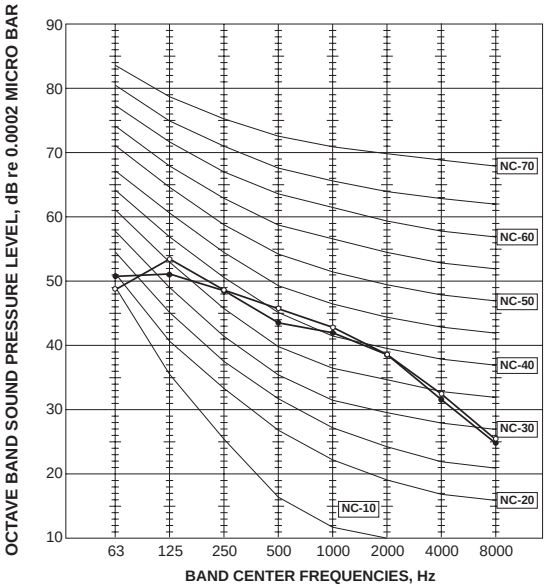

SUZ-M50VA

FAN SPEED	FUNCTION	SPL(dB(A))	LINE
High	COOLING	48	●——●
	HEATING	49	○——○

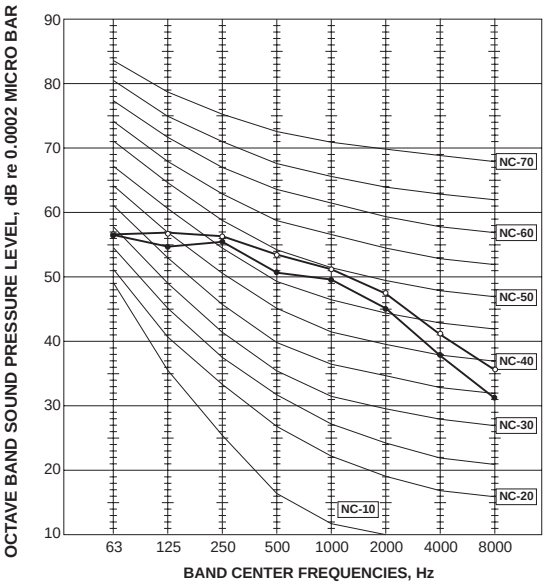

SUZ-M60VA
SUZ-M71VA

FAN SPEED	FUNCTION	SPL(dB(A))	LINE
High	COOLING	49	●——●
	HEATING	51	○——○

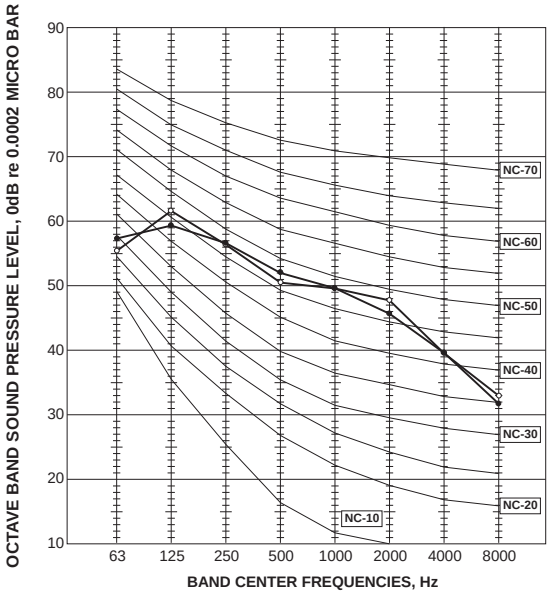

Test conditions

Cooling: Dry-bulb temperature 35°C
Heating: Dry-bulb temperature 7°C
Wet-bulb temperature 6°C

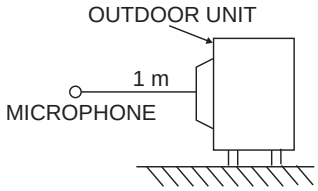

B.3.5.2 R410A type

SUZ-KA25VA6

FAN SPEED	FUNCTION	SPL(dB(A))	LINE
High Med.	COOLING	47	●——●
	HEATING	48	○——○

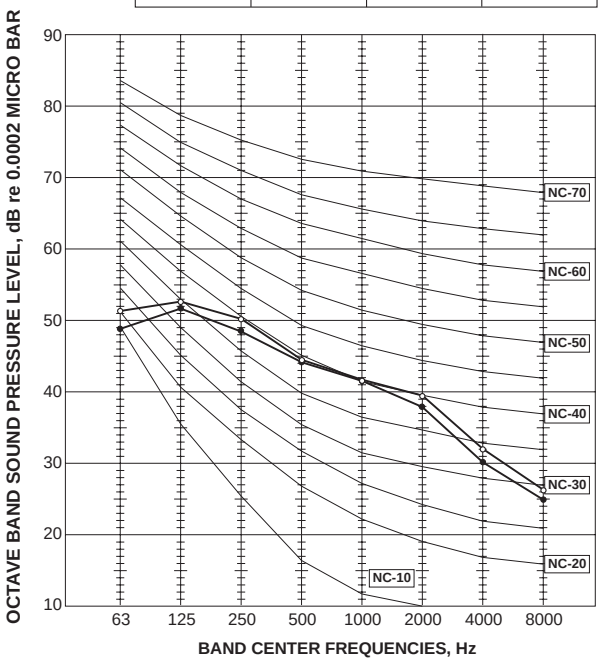

SUZ-KA35VA6

FAN SPEED	FUNCTION	SPL(dB(A))	LINE
High Med.	COOLING	49	●——●
	HEATING	50	○——○

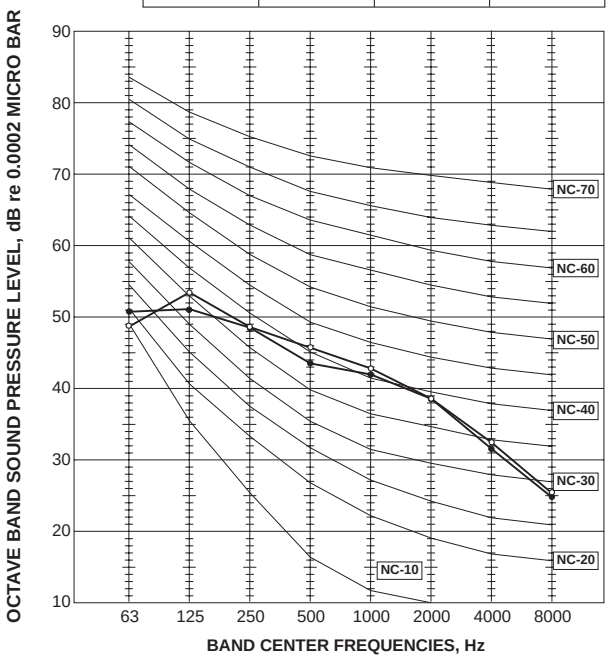

SUZ-KA50VA6

FAN SPEED	FUNCTION	SPL(dB(A))	LINE
High	COOLING	52	●——●
	HEATING	52	○——○

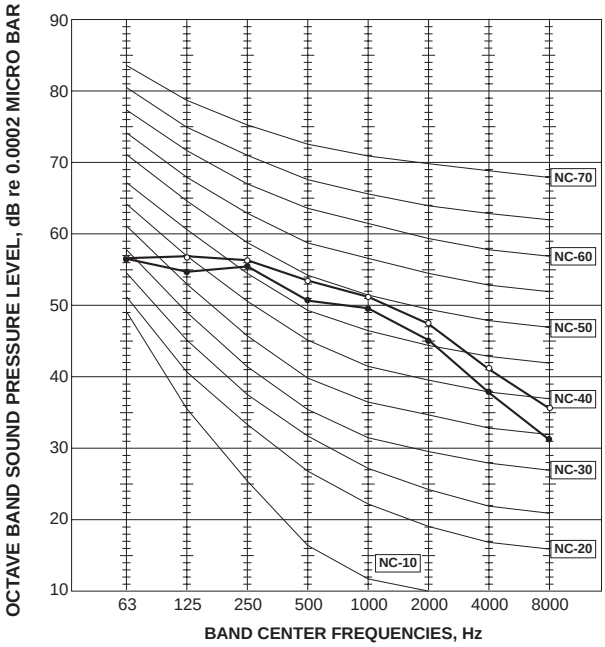

SUZ-KA60VA6
SUZ-KA71VA6

FAN SPEED	FUNCTION	SPL(dB(A))	LINE
High	COOLING	55	●——●
	HEATING	55	○——○

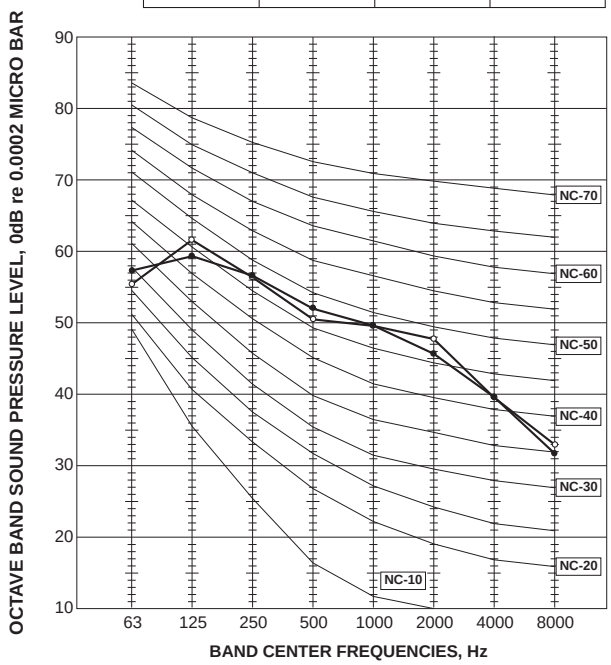

Test conditions
Cooling: Dry-bulb temperature 35°C
Heating: Dry-bulb temperature 7°C
Wet-bulb temperature 6°C

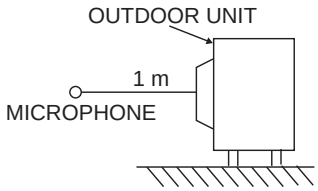

B.3.6 CAPACITY CORRECTION RATIO CURVE PIPING LENGTH

B.3.6.1 R32 type

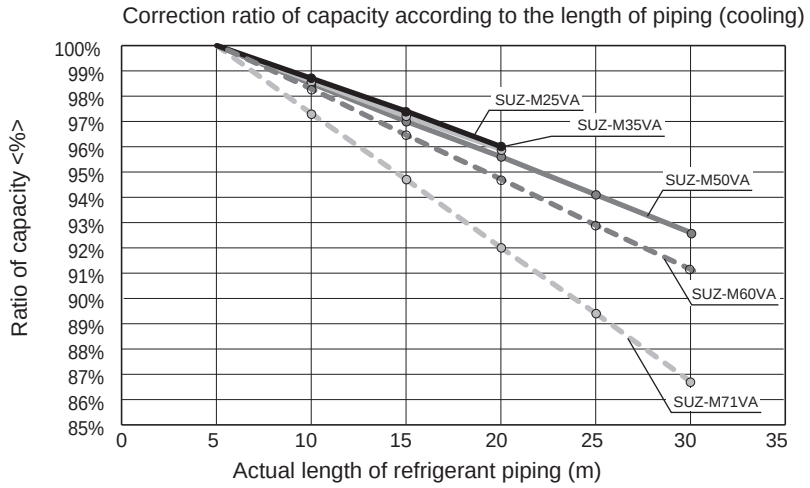

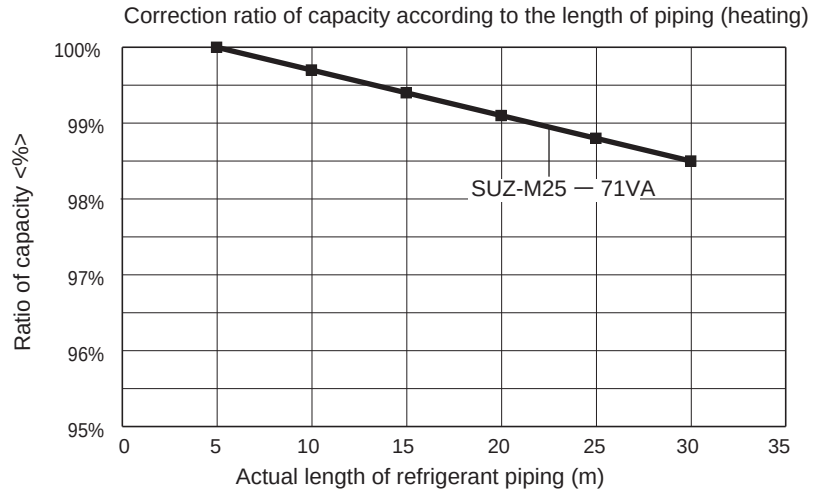

● **Up to 20m for M25,35model.**

The length intended for the capacity calculation, which counts the length of refrigerant piping and the number of bends, is called actual length.

Length of refrigerant piping (m) + (Number of bends × 0.3 m) = Actual length of refrigerant piping (m)

B.3.6.2 R410A type

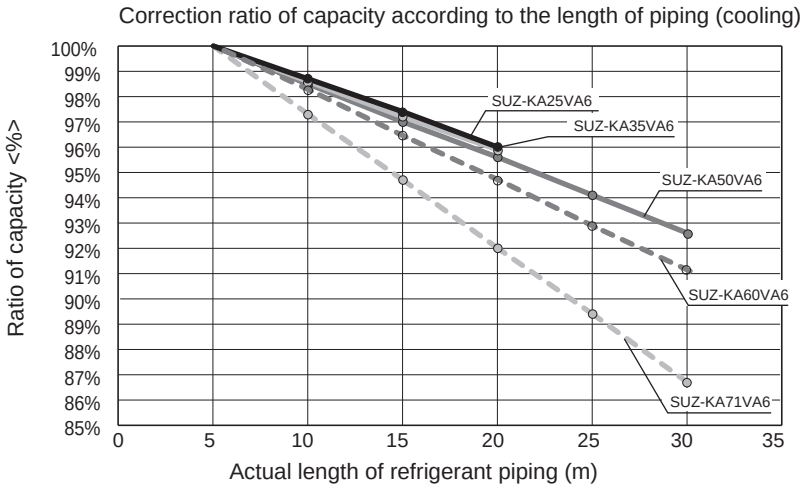

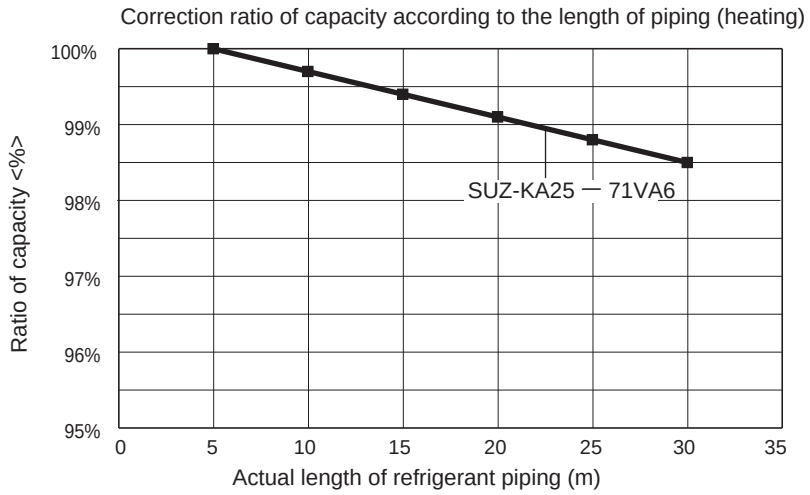

● **Up to 20m for KA25,35model.**

The length intended for the capacity calculation, which counts the length of refrigerant piping and the number of bends, is called actual length.

Length of refrigerant piping (m) + (Number of bends × 0.3 m) = Actual length of refrigerant piping (m)

B.3.7 EARTHQUAKE-PROOF STRENGTH ANALYSIS

B.3.7.1 R32 type

Earthquake-proof strength analysis <Anchor bolt>

1.Type: S Series Inverter Outdoor unit

2.Model name: SUZ-M25VA

3.Specification

(1) Unit mass	W=	30	kg	
(2) Anchor bolt				
1.The total number of bolts.	N=	4		
2.The size and shape.	"=M	10	type	
3.The axis section area per one bolt.	A=	78	mm^2=	78×10^{-6} m^2
4.The total number of bolts in one side which be pulled stronger when the unit inverted.	Nt=	2		
(3) The height between the installing surface and the center of gravity of the unit	Hg=	250	mm=	0.250 m
(4) The bolt-span from the examination angle	L=	325	mm=	0.325 m
(5) The distance between the center of bolt and the center of gravity of the unit	Lg=	146	mm (Lg≦L/2)=	0.146 m

4.The examination calculation (by rounding off to the first decimal place of each item)

(1) The horizontal seismic coefficient for designing	Kh=	1.0		
(2) The vertical seismic coefficient for designing	Kv=Kh/2=	0.5		
(3) The horizontal earthquake forces for designing	Fh=Kh·W·9.8=	294.0	N	
(4) The vertical earthquake forces for designing	Fv=Kv·W·9.8=	147.0	N	
(5) The withdrawal strength of the anchor bolt $Rb=\frac{Fh\cdot Hg-(W\cdot 9.8-Fv)\cdot Lg}{L\cdot Nt}$	=	80.3	N	
(6) The shear forces of the anchor bolt	Q=Fh/N=	73.5	N	
(7) The stress arising to the anchor bolt				
1.The tensile stress.	σ=Rb/A=	1.0	MPa＜ ft = 176.4 MPa	
2.The shearing stress.	τ=Q/A=	0.9	MPa＜ fs = 132.3 MPa	
3.The stress when affected by both the shearing and the tensile at the same time. fts=1.4ft-1.6 τ =		245.5	MPa	
σ= 1.0 MPa	＜ fts=	176.0	MPa	
(8) The construction way of the anchor bolt				
1.The construction way of the anchor bolt.	=	Boxed J type anchor		
2.The thickness of the concrete.	=	120	mm=	0.120 m
3.The length of buried part of bolt.	=	70	mm=	0.070 m
4.The permissible withdrawal weight.	Ta=	3136	N ＞	Rb= 80 N

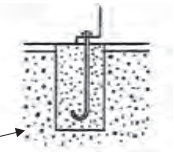

Since the results from the examination above, the anchor bolt has enough strength

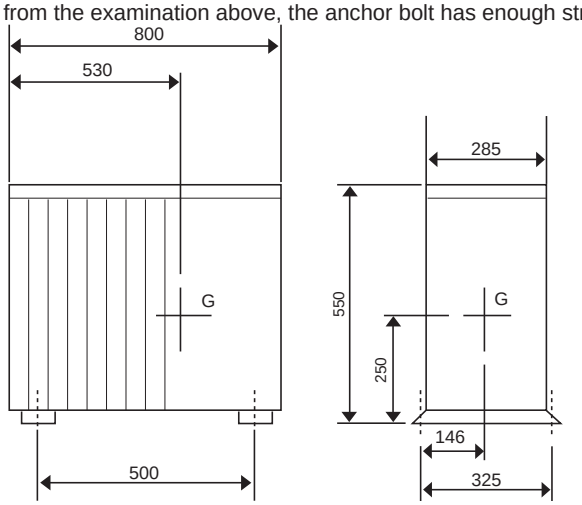

Earthquake-proof strength analysis <Anchor bolt>

1.Type: S Series Inverter Outdoor unit

2.Model name: SUZ-M35VA

3.Specification

(1) Unit mass	W=	35	kg	
(2) Anchor bolt				
1.The total number of bolts.	N=	4		
2.The size and shape.	"=M	10	type	
3.The axis section area per one bolt.	A=	78	mm^2=	78×10^{-6} m^2
4.The total number of bolts in one side which be pulled stronger when the unit inverted.	Nt=	2		
(3) The height between the installing surface and the center of gravity of the unit	Hg=	245	mm=	0.245 m
(4) The bolt-span from the examination angle	L=	325	mm=	0.325 m
(5) The distance between the center of bolt and the center of gravity of the unit	Lg=	141	mm(Lg≦L/2)=	0.141 m

4.The examination calculation (by rounding off to the first decimal place of each item)

(1) The horizontal seismic coefficient for designing	Kh=	1.0	
(2) The vertical seismic coefficient for designing	Kv=Kh/2=	0.5	
(3) The horizontal earthquake forces for designing	Fh=Kh·W·9.8=	343.0	N
(4) The vertical earthquake forces for designing	Fv=Kv·W·9.8=	171.5	N
(5) The withdrawal strength of the anchor bolt $Rb = \frac{Fh\cdot Hg-(W\cdot 9.8-Fv)\cdot Lg}{L\cdot Nt}$	=	92.1	N
(6) The shear forces of the anchor bolt	Q=Fh/N=	85.8	N
(7) The stress arising to the anchor bolt			
1.The tensile stress.	σ=Rb/A=	1.2	MPa < ft = 176.4 MPa
2.The shearing stress.	τ=Q/A=	1.1	MPa < fs = 132.3 MPa
3.The stress when affected by both the shearing and the tensile at the same time. fts=1.4ft-1.6 τ =		245.2	MPa
σ= 1.2 MPa	< fts=	176.0	MPa
(8) The construction way of the anchor bolt			
1.The construction way of the anchor bolt.	=	Boxed J type anchor	
2.The thickness of the concrete.	=	120 mm =	0.120 m
3.The length of buried part of bolt.	=	70 mm =	0.070 m
4.The permissible withdrawal weight.	Ta=	3136 N	> Rb= 92 N

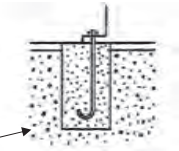

Since the results from the examination above, the anchor bolt has enough strength

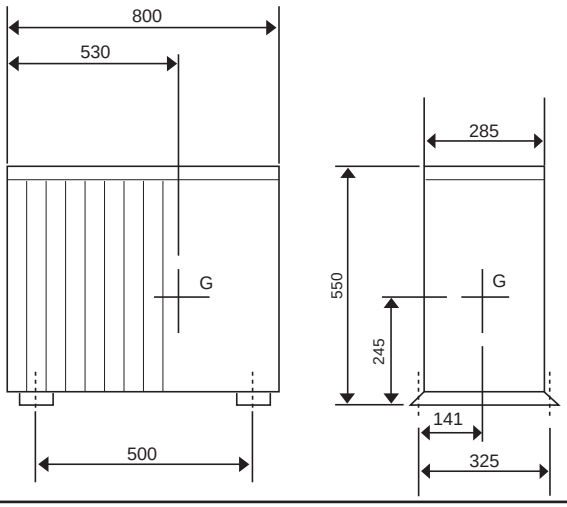

Earthquake-proof strength analysis <Anchor bolt>

1.Type: S Series Inverter Outdoor unit

2.Model name: SUZ-M50VA

3.Specification

(1) Unit mass	W=	41	kg	
(2) Anchor bolt				
1.The total number of bolts.	N=	4		
2.The size and shape.	"=M	10	type	
3.The axis section area per one bolt.	A=	78	mm^2=	78×10^{-6} m^2
4.The total number of bolts in one side which be pulled stronger when the unit inverted.	Nt=	2		
(3) The height between the installing surface and the center of gravity of the unit	Hg=	305	mm=	0.305 m
(4) The bolt-span from the examination angle	L=	285	mm=	0.285 m
(5) The distance between the center of bolt and the center of gravity of the unit	Lg=	151	mm(Lg≦L/2)=	0.151 m

4.The examination calculation (by rounding off to the first decimal place of each item)

(1) The horizontal seismic coefficient for designing	Kh=	1.0	N
(2) The vertical seismic coefficient for designing	Kv=Kh/2=	0.5	N
(3) The horizontal earthquake forces for designing	Fh=Kh・W・9.8=	401.8	N
(4) The vertical earthquake forces for designing	Fv=Kv・W・9.8=	200.9	N
(5) The withdrawal strength of the anchor bolt $Rb=\frac{Fh\cdot Hg-(W\cdot 9.8-Fv)\cdot Lg}{L\cdot Nt}$	=	161.8	N
(6) The shear forces of the anchor bolt	Q=Fh/N=	100.5	N
(7) The stress arising to the anchor bolt			
1.The tensile stress.	σ=Rb/A=	2.1	MPa < ft = 176.4 MPa
2.The shearing stress.	τ=Q/A=	1.3	MPa < fs = 132.3 MPa
3.The stress when affected by both the shearing and the tensile at the same time. fts=1.4ft-1.6 τ =		244.9	MPa
σ= 2.1 MPa	< fts=	176.0	MPa
(8) The construction way of the anchor bolt			
1.The construction way of the anchor bolt.	=	Boxed J type anchor	
2.The thickness of the concrete.	=	120 mm =	0.120 m
3.The length of buried part of bolt.	=	70 mm =	0.070 m
4.The permissible withdrawal weight.	Ta=	3136 N >	Rb= 162 N

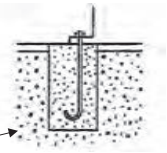

Since the results from the examination above, the anchor bolt has enough strength

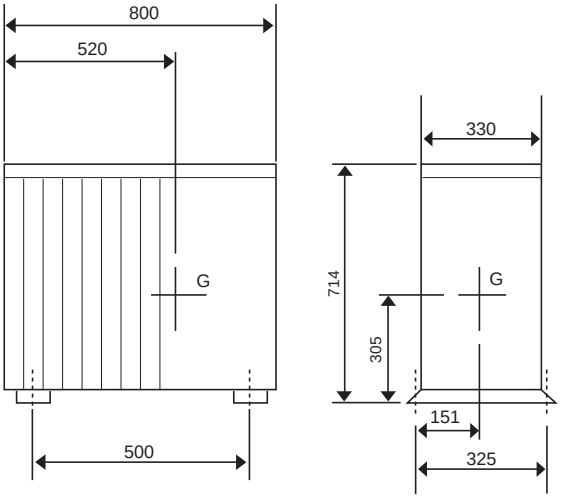

Earthquake-proof strength analysis <Anchor bolt>

1.Type: S Series Inverter Outdoor unit

2.Model name: SUZ-M60VA

3.Specification

(1) Unit mass	W=	54	kg
(2) Anchor bolt			
1.The total number of bolts.	N=	4	
2.The size and shape.	"=M	10	type
3.The axis section area per one bolt.	A=	78	mm^2= 78×10^{-6} m^2
4.The total number of bolts in one side which be pulled stronger when the unit inverted.	Nt=	2	
(3) The height between the installing surface and the center of gravity of the unit	Hg=	360	mm= 0.360 m
(4) The bolt-span from the examination angle	L=	360	mm= 0.360 m
(5) The distance between the center of bolt and the center of gravity of the unit	Lg=	139	mm(Lg≦L/2)= 0.139 m

4.The examination calculation (by rounding off to the first decimal place of each item)

(1) The horizontal seismic coefficient for designing	Kh=	1.0	
(2) The vertical seismic coefficient for designing	Kv=Kh/2=	0.5	
(3) The horizontal earthquake forces for designing	Fh=Kh·W·9.8=	529.2	N
(4) The vertical earthquake forces for designing	Fv=Kv·W·9.8=	264.6	N
(5) The withdrawal strength of the anchor bolt $Rb=\frac{Fh\cdot Hg-(W\cdot 9.8-Fv)\cdot Lg}{L\cdot Nt}$	=	213.9	N
(6) The shear forces of the anchor bolt	Q=Fh/N=	132.3	N
(7) The stress arising to the anchor bolt			
1.The tensile stress.	σ=Rb/A=	2.7	MPa< ft = 176.4 MPa
2.The shearing stress.	τ=Q/A=	1.7	MPa < fs = 132.3 MPa
3.The stress when affected by both the shearing and the tensile at the same time. fts=1.4ft-1.6 τ =		244.2	MPa
σ= 2.7 MPa	< fts=	176.0	MPa
(8) The construction way of the anchor bolt			
1.The construction way of the anchor bolt.	=	Boxed J type anchor	
2.The thickness of the concrete.	=	120	mm = 0.120 m
3.The length of buried part of bolt.	=	70	mm = 0.070 m
4.The permissible withdrawal weight.	Ta=	3136	N > Rb= 214 N

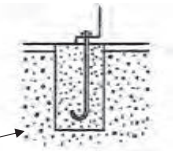

Since the results from the examination above, the anchor bolt has enough strength

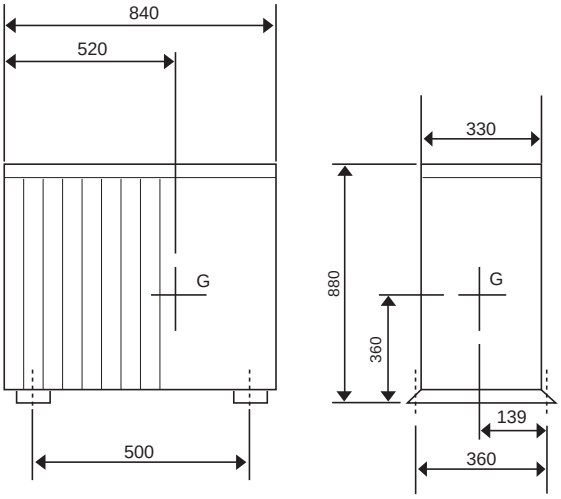

Earthquake-proof strength analysis <Anchor bolt>

1.Type: S Series Inverter Outdoor unit

2.Model name: SUZ-M71VA

3.Specification

(1) Unit mass	W=	55	kg		
(2) Anchor bolt					
1.The total number of bolts.	N=	4			
2.The size and shape.	"=M	10	type		
3.The axis section area per one bolt.	A=	78	mm^2=	78×10^{-6}	m^2
4.The total number of bolts in one side which be pulled stronger when the unit inverted.	Nt=	2			
(3) The height between the installing surface and the center of gravity of the unit	Hg=	365	mm=	0.365	m
(4) The bolt-span from the examination angle	L=	360	mm=	0.360	m
(5) The distance between the center of bolt and the center of gravity of the unit	Lg=	144	mm(Lg≦L/2)=	0.144	m

4.The examination calculation (by rounding off to the first decimal place of each item)

(1) The horizontal seismic coefficient for designing	Kh=	1.0	
(2) The vertical seismic coefficient for designing	Kv=Kh/2=	0.5	
(3) The horizontal earthquake forces for designing	Fh=Kh・W・9.8=	539.0	N
(4) The vertical earthquake forces for designing	Fv=Kv・W・9.8=	269.5	N
(5) The withdrawal strength of the anchor bolt $Rb=\frac{Fh\cdot Hg-(W\cdot 9.8-Fv)\cdot Lg}{L\cdot Nt}$	=	219.3	N
(6) The shear forces of the anchor bolt	Q=Fh/N=	134.8	N
(7) The stress arising to the anchor bolt			
1.The tensile stress.	σ=Rb/A=	2.8	MPa< ft = 176.4 MPa
2.The shearing stress.	τ =Q/A=	1.7	MPa < fs = 132.3 MPa
3.The stress when affected by both the shearing and the tensile at the same time. fts=1.4ft-1.6 τ =		244.2	MPa
σ= 2.8 MPa	< fts=	176.0	MPa
(8) The construction way of the anchor bolt			
1.The construction way of the anchor bolt.	=	Boxed J type anchor	
2.The thickness of the concrete.	=	120 mm =	0.120 m
3.The length of buried part of bolt.	=	70 mm =	0.070 m
4.The permissible withdrawal weight.	Ta=	3136 N >	Rb= 219 N

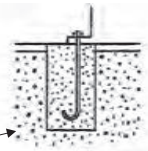

Since the results from the examination above, the anchor bolt has enough strength

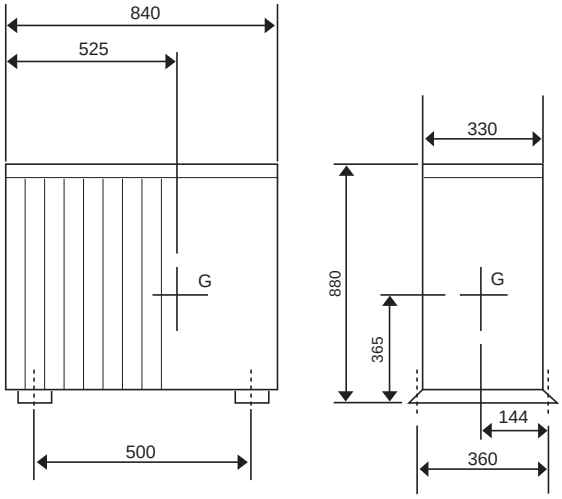

B.3.7.2 R410A type
Earthquake-proof strength analysis <Anchor bolt>

1.Type: S Series Inverter Outdoor unit

2.Model name: SUZ-KA25VA6

3.Specification

(1) Unit mass	W=	30	kg		
(2) Anchor bolt					
1.The total number of bolts.	N=	4			
2.The size and shape.	"=M	10	type		
3.The axis section area per one bolt.	A=	78	mm^2=	78×10^{-6}	m^2
4.The total number of bolts in one side which be pulled stronger when the unit inverted.	Nt=	2			
(3) The height between the installing surface and the center of gravity of the unit	Hg=	240	mm=	0.240	m
(4) The bolt-span from the examination angle	L=	325	mm=	0.325	m
(5) The distance between the center of bolt and the center of gravity of the unit	Lg=	160	mm (Lg≦L/2)=	0.160	m

4.The examination calculation (by rounding off to the first decimal place of each item)

(1) The horizontal seismic coefficient for designing	Kh=	1.0	
(2) The vertical seismic coefficient for designing	Kv=Kh/2=	0.5	
(3) The horizontal earthquake forces for designing	Fh=Kh・W・9.8=	294.0	N
(4) The vertical earthquake forces for designing	Fv=Kv・W・9.8=	147.0	N
(5) The withdrawal strength of the anchor bolt $Rb=\frac{Fh\cdot Hg-(W\cdot 9.8-Fv)\cdot Lg}{L\cdot Nt}$	=	72.4	N
(6) The shear forces of the anchor bolt	Q=Fh/N=	73.5	N
(7) The stress arising to the anchor bolt			
1.The tensile stress.	σ=Rb/A=	0.9	MPa＜ ft = 176.4 MPa
2.The shearing stress.	τ =Q/A=	0.9	MPa＜ fs = 132.3 MPa
3.The stress when affected by both the shearing and the tensile at the same time. fts=1.4ft-1.6 τ =		245.5	MPa
σ = 0.9 MPa	＜ fts=	176.0	MPa
(8) The construction way of the anchor bolt			
1.The construction way of the anchor bolt.	=	Boxed J type anchor	
2.The thickness of the concrete.	=	120 mm =	0.120 m
3.The length of buried part of bolt.	=	70 mm =	0.070 m
4.The permissible withdrawal weight.	Ta=	3136 N ＞	Rb= 72 N

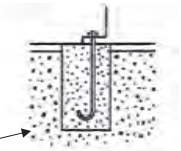

Since the results from the examination above, the anchor bolt has enough strength

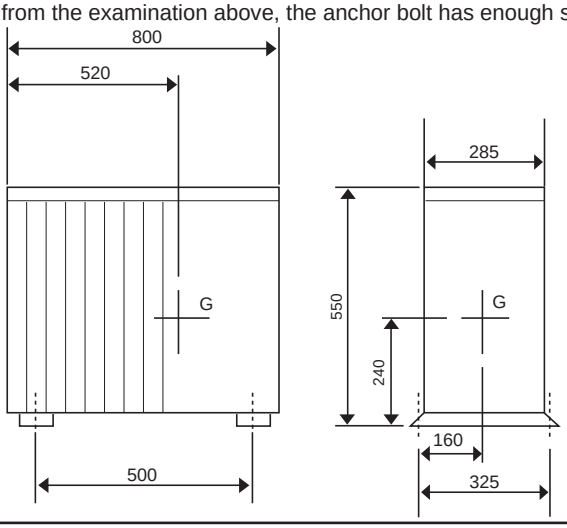

Earthquake-proof strength analysis <Anchor bolt>

1.Type: S Series Inverter Outdoor unit

2.Model name: SUZ-KA35VA6

3.Specification

(1) Unit mass	W=	35	kg	
(2) Anchor bolt				
1.The total number of bolts.	N=	4		
2.The size and shape.	"=M	10	type	
3.The axis section area per one bolt.	A=	78	mm^2=	78×10^{-6} m^2
4.The total number of bolts in one side which be pulled stronger when the unit inverted.	Nt=	2		
(3) The height between the installing surface and the center of gravity of the unit	Hg=	240	mm=	0.240 m
(4) The bolt-span from the examination angle	L=	325	mm=	0.325 m
(5) The distance between the center of bolt and the center of gravity of the unit	Lg=	160	mm(Lg≦L/2)=	0.160 m

4.The examination calculation (by rounding off to the first decimal place of each item)

(1) The horizontal seismic coefficient for designing	Kh=	1.0	
(2) The vertical seismic coefficient for designing	Kv=Kh/2=	0.5	
(3) The horizontal earthquake forces for designing	Fh=Kh·W·9.8=	343.0	N
(4) The vertical earthquake forces for designing	Fv=Kv·W·9.8=	171.5	N
(5) The withdrawal strength of the anchor bolt $Rb=\frac{Fh\cdot Hg-(W\cdot 9.8-Fv)\cdot Lg}{L\cdot Nt}$	=	84.4	N
(6) The shear forces of the anchor bolt	Q=Fh/N=	85.8	N
(7) The stress arising to the anchor bolt			
1.The tensile stress.	σ=Rb/A=	1.1	MPa < ft = 176.4 MPa
2.The shearing stress.	τ=Q/A=	1.1	MPa < fs = 132.3 MPa
3.The stress when affected by both the shearing and the tensile at the same time. fts=1.4ft-1.6 τ =		245.2	MPa
σ= 1.1 MPa	< fts=	176.0	MPa
(8) The construction way of the anchor bolt			
1.The construction way of the anchor bolt.	=	Boxed J type anchor	
2.The thickness of the concrete.	=	120	mm = 0.120 m
3.The length of buried part of bolt.	=	70	mm = 0.070 m
4.The permissible withdrawal weight.	Ta=	3136	N > Rb= 84 N

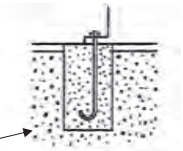

Since the results from the examination above, the anchor bolt has enough strength

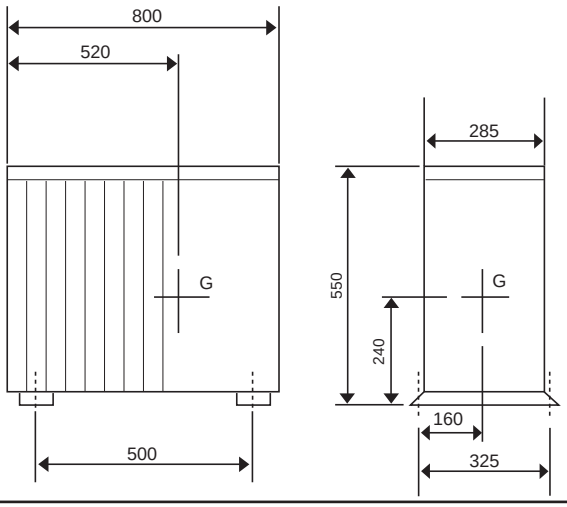

Earthquake-proof strength analysis <Anchor bolt>

1.Type: S Series Inverter Outdoor unit

2.Model name: SUZ-KA50VA6

3.Specification

(1) Unit mass	W=	54	kg	
(2) Anchor bolt				
1.The total number of bolts.	N=	4		
2.The size and shape.	"=M	10	type	
3.The axis section area per one bolt.	A=	78	mm^2=	78×10^{-6} m^2
4.The total number of bolts in one side which be pulled stronger when the unit inverted.	Nt=	2		
(3) The height between the installing surface and the center of gravity of the unit	Hg=	340	mm=	0.340 m
(4) The bolt-span from the examination angle	L=	360	mm=	0.360 m
(5) The distance between the center of bolt and the center of gravity of the unit	Lg=	165	mm(Lg≦L/2)=	0.165 m

4.The examination calculation (by rounding off to the first decimal place of each item)

(1) The horizontal seismic coefficient for designing	Kh=	1.0	
(2) The vertical seismic coefficient for designing	Kv=Kh/2=	0.5	
(3) The horizontal earthquake forces for designing	Fh=Kh·W·9.8=	529.2	N
(4) The vertical earthquake forces for designing	Fv=Kv·W·9.8=	264.6	N
(5) The withdrawal strength of the anchor bolt $Rb=\frac{Fh\cdot Hg-(W\cdot 9.8-Fv)\cdot Lg}{L\cdot Nt}$	=	189.3	N
(6) The shear forces of the anchor bolt	Q=Fh/N=	132.3	N
(7) The stress arising to the anchor bolt			
1.The tensile stress.	σ=Rb/A=	2.4	MPa < ft = 176.4 MPa
2.The shearing stress.	τ=Q/A=	1.7	MPa < fs = 132.3 MPa
3.The stress when affected by both the shearing and the tensile at the same time. fts=1.4ft-1.6 τ =		244.2	MPa
σ= 2.4 MPa	< fts=	176.0	MPa
(8) The construction way of the anchor bolt			
1.The construction way of the anchor bolt.	=	Boxed J type anchor	
2.The thickness of the concrete.	=	120 mm =	0.120 m
3.The length of buried part of bolt.	=	70 mm =	0.070 m
4.The permissible withdrawal weight.	Ta=	3136 N >	Rb= 189 N

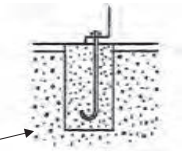

Since the results from the examination above, the anchor bolt has enough strength

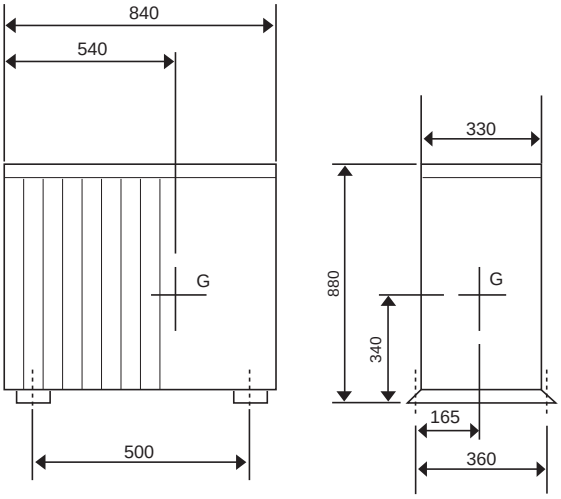

Earthquake-proof strength analysis <Anchor bolt>

1.Type: S Series Inverter Outdoor unit

2.Model name: SUZ-KA60VA6

3.Specification

(1) Unit mass	W=	50	kg	
(2) Anchor bolt				
1.The total number of bolts.	N=	4		
2.The size and shape.	"=M	10	type	
3.The axis section area per one bolt.	A=	78	mm^2=	78×10^{-6} m^2
4.The total number of bolts in one side which be pulled stronger when the unit inverted.	Nt=	2		
(3) The height between the installing surface and the center of gravity of the unit	Hg=	340	mm=	0.340 m
(4) The bolt-span from the examination angle	L=	360	mm=	0.360 m
(5) The distance between the center of bolt and the center of gravity of the unit	Lg=	165	mm(Lg≦L/2)=	0.165 m

4.The examination calculation (by rounding off to the first decimal place of each item)

(1) The horizontal seismic coefficient for designing	Kh=	1.0	
(2) The vertical seismic coefficient for designing	Kv=Kh/2=	0.5	
(3) The horizontal earthquake forces for designing	Fh=Kh・W・9.8=	490.0	N
(4) The vertical earthquake forces for designing	Fv=Kv・W・9.8=	245.0	N
(5) The withdrawal strength of the anchor bolt $Rb=\frac{Fh\cdot Hg-(W\cdot 9.8-Fv)\cdot Lg}{L\cdot Nt}$	=	175.2	N
(6) The shear forces of the anchor bolt	Q=Fh/N=	122.5	N
(7) The stress arising to the anchor bolt			
1.The tensile stress.	σ=Rb/A=	2.2	MPa < ft = 176.4 MPa
2.The shearing stress.	τ=Q/A=	1.6	MPa < fs = 132.3 MPa
3.The stress when affected by both the shearing and the tensile at the same time. fts=1.4ft-1.6 τ =		244.4	MPa
σ= 2.2 MPa	< fts=	176.0	MPa
(8) The construction way of the anchor bolt			
1.The construction way of the anchor bolt.	=	Boxed J type anchor	
2.The thickness of the concrete.	=	120 mm =	0.120 m
3.The length of buried part of bolt.	=	70 mm =	0.070 m
4.The permissible withdrawal weight.	Ta=	3136 N >	Rb= 175 N

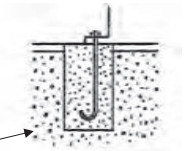

Since the results from the examination above, the anchor bolt has enough strength

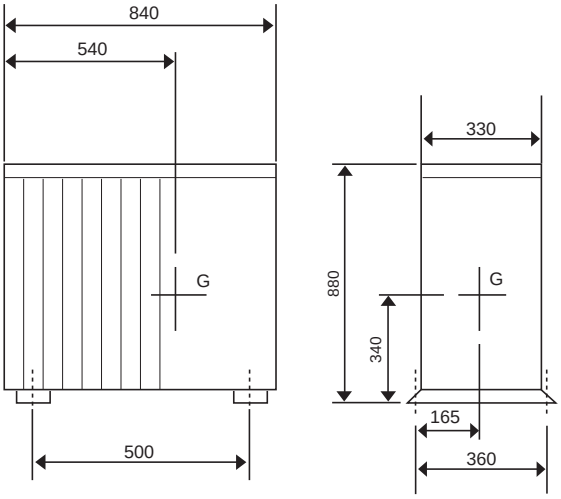

Earthquake-proof strength analysis <Anchor bolt>

1.Type: S Series Inverter Outdoor unit

2.Model name: SUZ-KA71VA6

3.Specification

(1) Unit mass	W=	53	kg		
(2) Anchor bolt					
1.The total number of bolts.	N=	4			
2.The size and shape.	"=M	10	type		
3.The axis section area per one bolt.	A=	78	mm^2=	78×10^{-6}	m^2
4.The total number of bolts in one side which be pulled stronger when the unit inverted.	Nt=	2			
(3) The height between the installing surface and the center of gravity of the unit	Hg=	340	mm=	0.340	m
(4) The bolt-span from the examination angle	L=	360	mm=	0.360	m
(5) The distance between the center of bolt and the center of gravity of the unit	Lg=	165	mm(Lg≦L/2)=	0.165	m

4.The examination calculation (by rounding off to the first decimal place of each item)

(1) The horizontal seismic coefficient for designing	Kh=	1.0		
(2) The vertical seismic coefficient for designing	Kv=Kh/2=	0.5		
(3) The horizontal earthquake forces for designing	Fh=Kh·W·9.8=	519.4	N	
(4) The vertical earthquake forces for designing	Fv=Kv·W·9.8=	259.7	N	
(5) The withdrawal strength of the anchor bolt $Rb=\frac{Fh\cdot Hg-(W\cdot 9.8-Fv)\cdot Lg}{L\cdot Nt}$	=	185.8	N	
(6) The shear forces of the anchor bolt	Q=Fh/N=	129.9	N	
(7) The stress arising to the anchor bolt				
1.The tensile stress.	σ=Rb/A=	2.4	MPa＜ft=176.4MPa	
2.The shearing stress.	τ=Q/A=	1.7	MPa＜fs=132.3MPa	
3.The stress when affected by both the shearing and the tensile at the same time. fts=1.4ft-1.6τ=		244.2	MPa	
σ= 2.4 MPa	＜ fts=	176.4	MPa	
(8) The construction way of the anchor bolt				
1.The construction way of the anchor bolt.	=	Boxed J type anchor		
2.The thickness of the concrete.	=	120	mm=	0.120 m
3.The length of buried part of bolt.	=	70	mm=	0.070 m
4.The permissible withdrawal weight.	Ta=	3136	N ＞ Rb	186 N

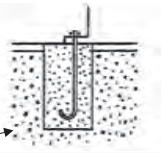
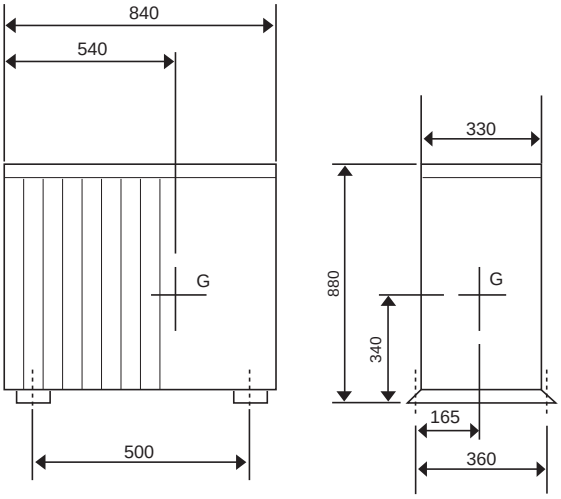
Since the results from the examination above, the anchor bolt has enough strength