SERVICE PARTS LIST FOR MITSUBISHI ELECTRIC PACKAGED AIR-CONDITIONERS

Series : PWFY-EP•VM-E1
PWFY-EP•VM-E2

REVISED

Feb. 2018

BWE01435A

INDEX
PWFY-EP100VM-E1-AU PWFY-EP100VM-E2-AU

Part information update day : **2018/02/13**

Please change the old catalog (issued Jan 2015, No.BWE014350) to this new catalog.
Content of revision : Some of parts are changed.

EXTERNAL PARTS

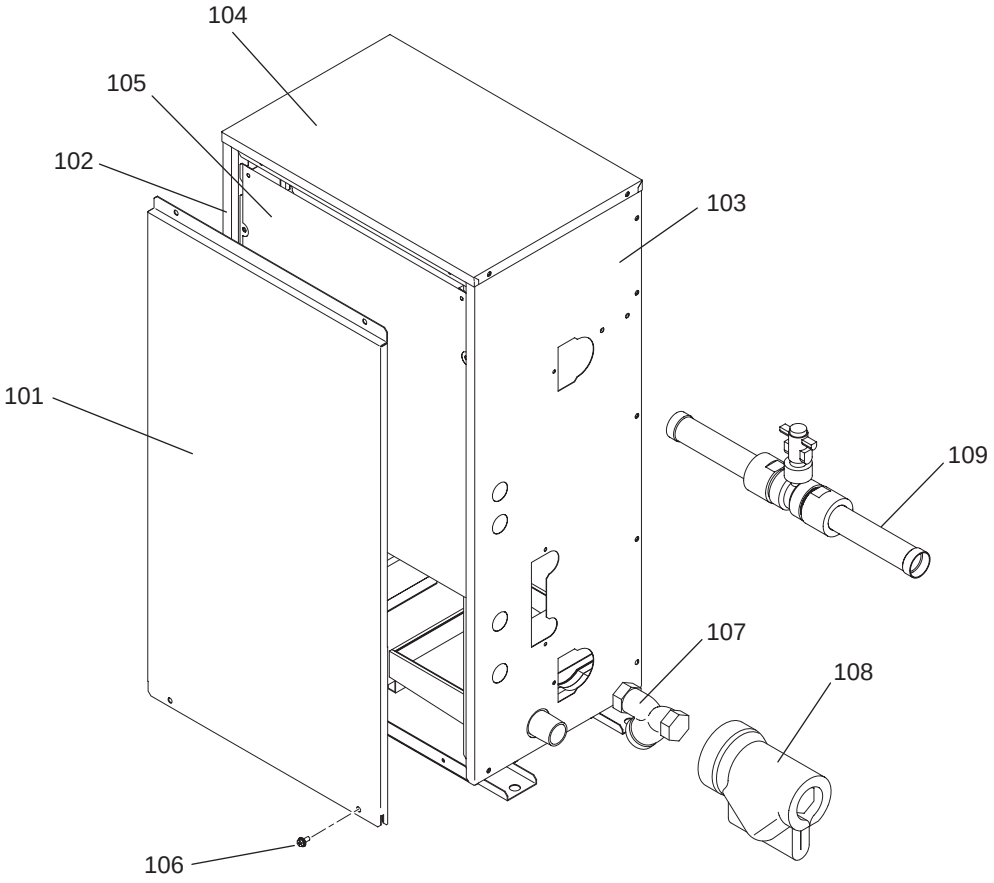

EXTERNAL PARTS

No.	Part No.	G : RoHS Apply Only W : RoHS Apply by Running Change	Part Name	Spec.	PWFY-EP100VM-E1-AU	PWFY-EP100VM-E2-AU					Dwg. No.	Notes for the models	Revision info.
101	R61 257 651	G	Panel assy F		1	1					KJ00L170G01		
102	R61 258 651	G	Panel assy R		1	1					KJ00L171G01		
103	R61 259 651	G	Panel assy SR		1	1					KJ00L172G01		
104	R61 260 651	G	Panel T		1	1					KB02L999H04		
105	R61 036 232	G	Sheet	CFR110C	1	1					KE73D404H02		
106	R63 007 087	G	H Screw	5×10 KNURLED (30Pcs)	1	1					KB00H418G14		
107	R61 006 454	G	Strainer		1	1					P641136X01		
108	R61 006 600	G	Insulator		1	1					KB33L902G02		
109	R61 024 541	G	Flow switch assy	AU series only (VK332M)	1	1					KD00F353G02		

FUNCTIONAL PARTS (1)

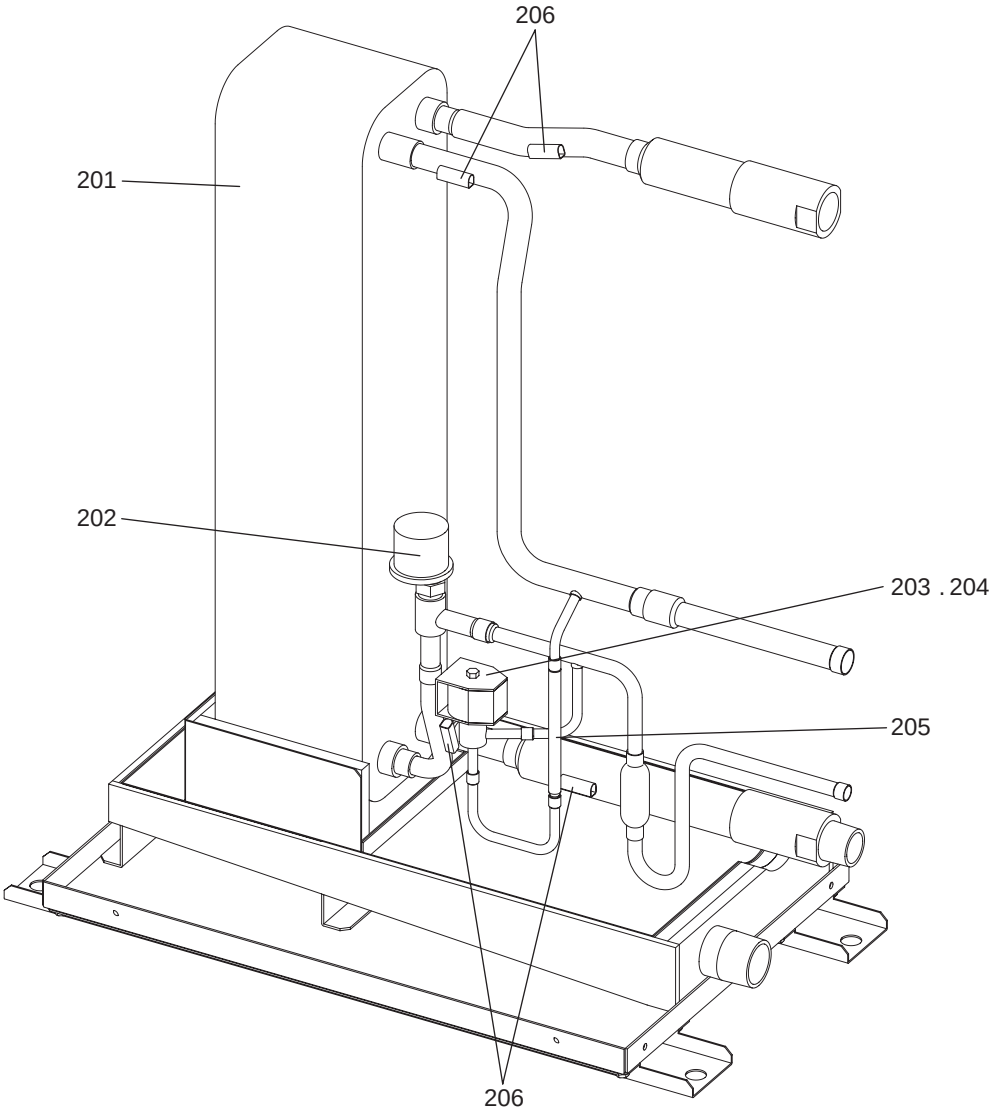

No.	Part No.	G : RoHS Apply Only W : RoHS Apply by Running Change	Part Name	Spec.	PWFY-EP100VM-E1-AU						Dwg. No.	Notes for the models	Revision info.
201	R61 919 480	G	Heat exchanger assy		1						KB00U710G07		
202	R63 004 401	G	Linear expansion valve	EFM-80YGMD-4	1						P632453X01	<LEV1Wa>	
203	R63 Y07 232	G	Solenoid valve	ATS-A	1						P631291X01	<SV1>	
204	R63 Y14 243	G	Solenoid valve coil		1						P472009X01	<SV1>	
205	R63 669 418	G	Check valve	3-6.35	1						S639001H01	<CV1>	
206	R61 060 200	G	Thermistor		4						P418065X01	<TH6,TH8,TH22,TH23>	

FUNCTIONAL PARTS (2)

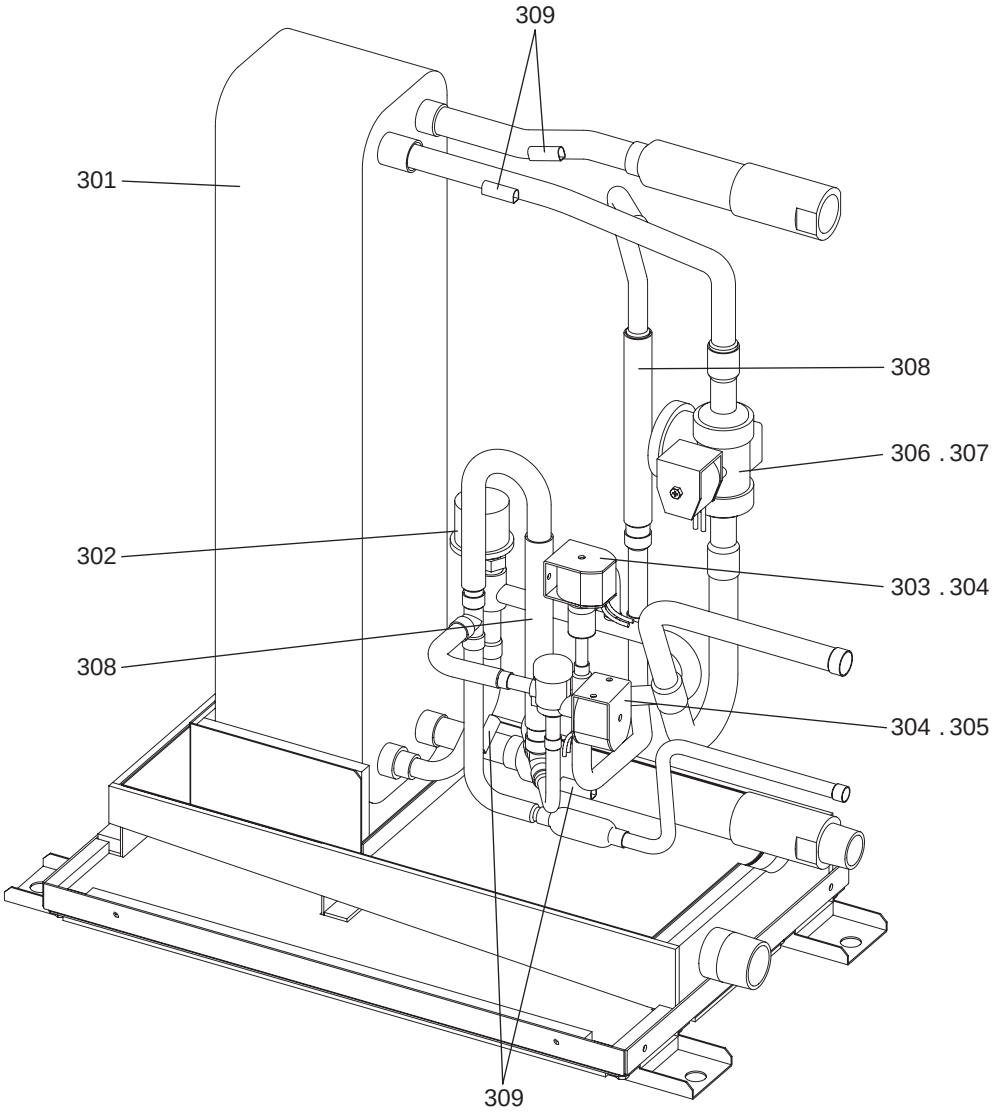

No.	Part No.	G : RoHS Apply Only W : RoHS Apply by Running Change	Part Name	Spec.	PWFY-EP100VM-E2-AU						Dwg. No.	Notes for the models	Revision info.
301	R61 920 480	G	Heat exchanger assy		1						KB00U710G08		
302	R63 004 401	G	Linear expansion valve	EFM-80YGMD-4	1						P632453X01	<LEV1Wa>	
303	R63 001 921	G	Solenoid valve	VPV	1						P631295X01	<SV1>	
304	R61 006 243	G	Solenoid valve coil	VPV Y	2						P472046X01	<SV1,SVL>	
305	R61 040 232	G	Solenoid valve	VPV-803DQ50	1						P631300X01	<SVL>	
306	R61 092 232	G	Solenoid valve	SR56PG-06WR	1						P631338X01	<SVG>	Chg.
307	R61 007 243	G	Solenoid valve coil	SR10D	1						P472030X02	<SVG>	
308	R61 005 418	G	Check valve	YAV	2						P633133X01	<CV1,CV2>	
309	R61 060 200	G	Thermistor		4						P418065X01	<TH6,TH8,TH22,TH23>	

CONTROL BOX PARTS

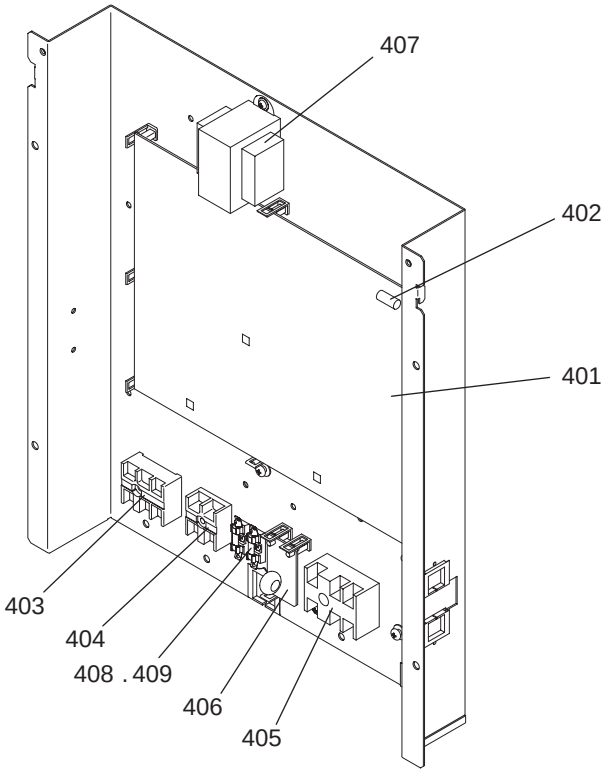

PWFY-EP100VM-E1-AU
PWFY-EP100VM-E2-AU

CONTROL BOX PARTS

No.	Part No.	G : RoHS Apply Only W : RoHS Apply by Running Change	Part Name	Spec.	PWFY-EP100VM-E1-AU	PWFY-EP100VM-E2-AU					Dwg. No.	Notes for the models	Revision info.
401	R61 357 280	G	Control board		1	1					KE80C274G13		Chg.
402	R61 021 239	G	Fuse	6.3A AC250V T	1	1					S423001H30	<F01>	Chg.
403	R61 003 246	G	Terminal block		1	1					BG00R200G45	<TB5>	
404	R61 004 246	G	Terminal block		1	1					BG00R200G15	<TB15>	
405	R61 002 246	G	Terminal block		1	1					BG00R200G26	<TB2>	
406	R63 Y22 280	G	DSA board		1	1					W849072G13		
407	R61 004 260	G	Transformer	240V/23.2V	1	1					P715419X01	<T01>	
408	R61 005 239	G	Fuse	3.15A AC250V T		2					S423001H39	<F02,F03>	
409	R61 Y08 241	G	Fuse holder			2					S423003H05		

MITSUBISHI ELECTRIC CORPORATION

BWE01435A (20180228)