Figure

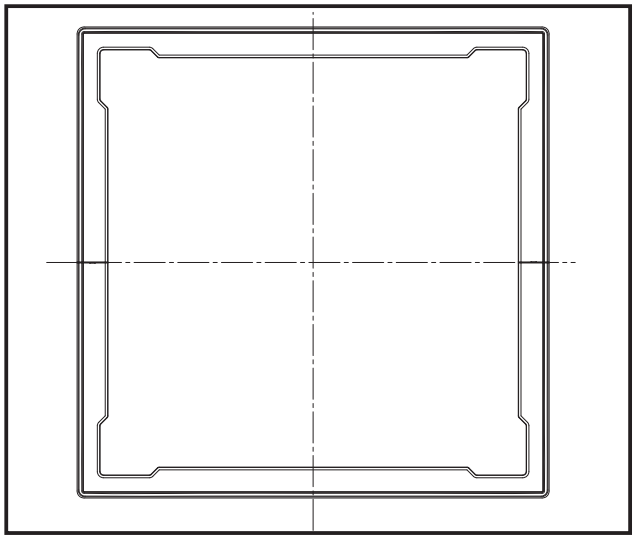

Descriptions

Enables to install cassete-type indoor units even if the ceiling height is low.
A part to the panel 40 mm lower than the ceiling surface.

Applicable Models

- PLA-ZM·EA series
- PLA-M·EA series
- PLA-SM·EA series

- PLFY-P VEM-E series

Specifications

Exterior	Color	Munsell No.1.0Y9.2/0.2
	Surface treatment	Coating
	Material	Styrofoam

Dimensions

Unit : mm

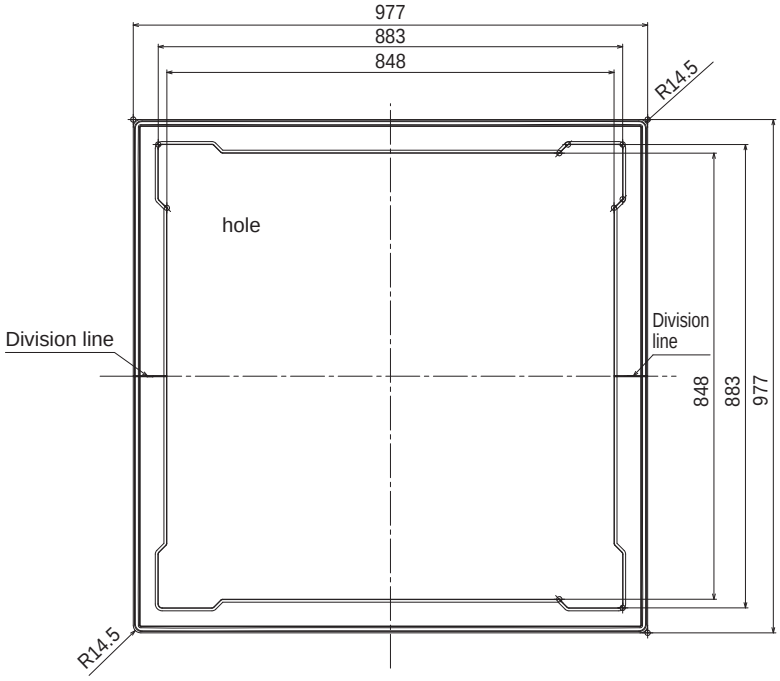

Design side & Paint work
(all surroundings)

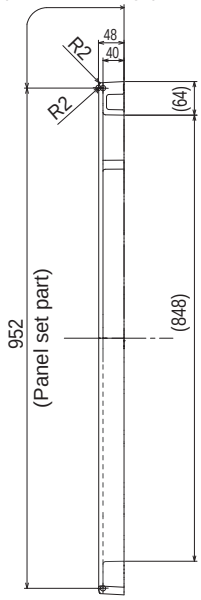

Installation dimension

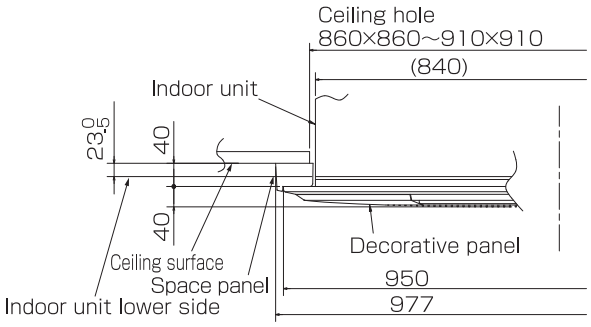

OPTIONAL PARTS

How to Use / How to Install

1. Checking packed parts

Make sure that you have all the following parts, in addition to this manual in this box:

Part No. /Part name	① Space panel	② Gauge for installation
Quantity	2	1 (Split this into four pieces)
Shape	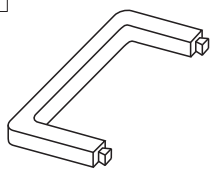	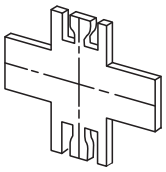

2. Installing space panel

- Install before installing decorative panel.
- This space panel is to be installed on decorative panel before installing on unit body.
  (If decorative panel has already been installed, remove it.)

Preparation for installation

(1) Checking size of opening in ceiling

- Make sure that opening in ceiling is within the range shown below:
  860×860～910×910

(2) Positioning of ceiling surface and unit body

- Divide the provided gauge for installation ② into four parts, and insert it into the unit or outlet of Multi-functional casement.
  Place the unit in the center of opening in ceiling, referring to the figure below.

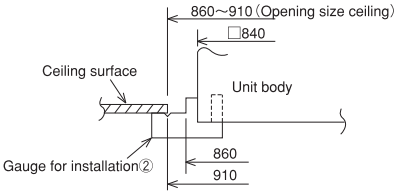

- Using provided gauge for installation ②, position the ceiling surface and unit body.
  If position of ceiling surface and unit body does not match, it may result in leak of draft, drip of dewdrops and incorrect operation of horizontal vane of decorative panel, etc.

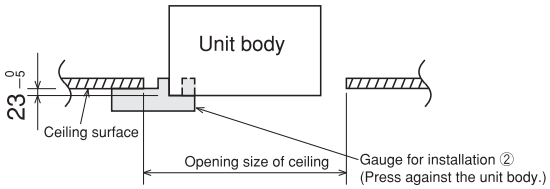

Setting the decorative panel and space panel

- Place the space panel ① (two locations), matching the flange section of decorative panel, and assemble space pane1 ① on the decorative panel and then set them.

※ Be sure to assemble space panel ① on the decorative panel:
If assembled incorrectly, space panel ① may break.

※ As an example, the in illustration of the E type 4-way cassette is shown.

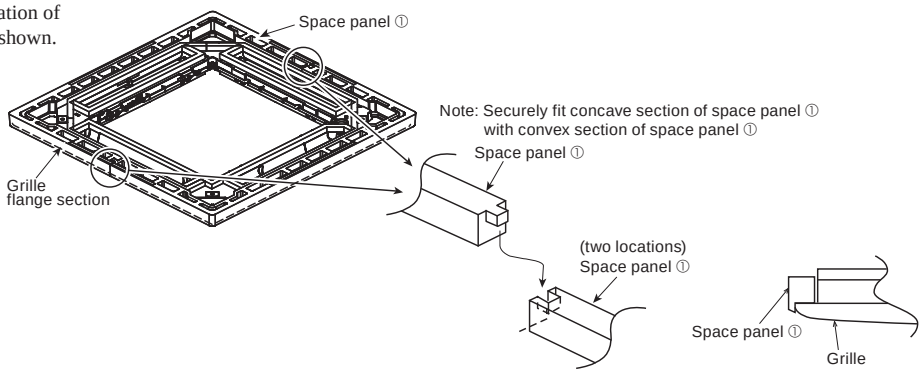

Installing on the unit body

- The procedures are the same as those for decorative panel.
  Install the assembled set, referring to the installation manual for decorative panel.