MITSUBISHI ELECTRIC

SPLIT-TYPE AIR CONDITIONERS

Revision F:
- Resistance value of the defrost heater for MUFZ-KJ25/35VEHZ -E1, E2, ER1, ER2, ET1, ET2 has been corrected (11-4.).

OBH668 REVISED EDITION-D is void.

OUTDOOR UNIT

SERVICE MANUAL

HFC utilized R410A

No. OBH668
REVISED EDITION-E

Models

MUFZ-KJ25VEHZ-E1, E2, ER1, ER2, ET1, ET2
MUFZ-KJ35VEHZ-E1, E2, ER1, ER2, ET1, ET2
MUFZ-KJ50VEHZ-E1, E2, ER1, ER2, ET1, ET2

Indoor unit service manual
MFZ-KJ•VE Series (OBH666)

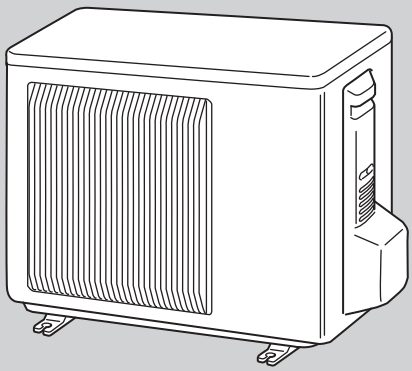

MUFZ-KJ25VEHZ
MUFZ-KJ35VEHZ

CONTENTS

1. TECHNICAL CHANGES ····· 2
2. PART NAMES AND FUNCTIONS ····· 3
3. SPECIFICATION ····· 4
4. NOISE CRITERIA CURVES ····· 6
5. OUTLINES AND DIMENSIONS ····· 7
6. WIRING DIAGRAM ····· 8
7. REFRIGERANT SYSTEM DIAGRAM ····· 12
8. PERFORMANCE CURVES ····· 14
9. ACTUATOR CONTROL ····· 25
10. SERVICE FUNCTIONS ····· 26
11. TROUBLESHOOTING ····· 27
12. DISASSEMBLY INSTRUCTIONS ····· 50

PARTS CATALOG (OBB668)

NOTE:
RoHS compliant products have <G> mark on the spec name plate.

Use the specified refrigerant only

Never use any refrigerant other than that specified.

Doing so may cause a burst, an explosion, or fire when the unit is being used, serviced, or disposed of.
Correct refrigerant is specified in the manuals and on the spec labels provided with our products.
We will not be held responsible for mechanical failure, system malfunction, unit breakdown or accidents caused by failure to follow the instructions.

<Preparation before the repair service>

- Prepare the proper tools.
- Prepare the proper protectors.
- Provide adequate ventilation.
- After stopping the operation of the air conditioner, turn off the power-supply breaker and remove the power plug.
- Discharge the capacitor before the work involving the electric parts.

<Precautions during the repair service>

- Do not perform the work involving the electric parts with wet hands.
- Do not pour water into the electric parts.
- Do not touch the refrigerant.
- Do not touch the hot or cold areas in the refrigeration cycle.
- When the repair or the inspection of the circuit needs to be done without turning off the power, exercise great caution not to touch the live parts.

Revision A:

• MUFZ-KJ50VEHZ -E1 has been added.

Revision B:

• MUFZ-KJ25VEHZ -ER1, MUFZ-KJ35VEHZ -ER1 and MUFZ-KJ50VEHZ -ER1 have been added.

Revision C:

• MUFZ-KJ25VEHZ -ET1, MUFZ-KJ35VEHZ -ET1 and MUFZ-KJ50VEHZ -ET1 have been added.

Revision D:

• MUFZ-KJ25VEHZ -E2,ER2,ET2, MUFZ-KJ35VEHZ -E2,ER2,ET2 and MUFZ-KJ50VEHZ -E2,ER2,ET2 have been added.

Revision F:

• Resistance value of the defrost heater for MUFZ-KJ25/35VEHZ -E1, E2, ER1, ER2, ET1, ET2 has been corrected (11-4.).

1 TECHNICAL CHANGES

MUFZ-KJ25VEHZ -E1,ER1
MUFZ-KJ35VEHZ -E1,ER1
MUFZ-KJ50VEHZ -E1,ER1

1. New model

MUFZ-KJ25VEHZ -ET1
MUFZ-KJ35VEHZ -ET1
MUFZ-KJ50VEHZ -ET1

1. New model

MUFZ-KJ25VEHZ -E1 ➔ MUFZ-KJ25VEHZ -E2
MUFZ-KJ35VEHZ -E1 ➔ MUFZ-KJ35VEHZ -E2
MUFZ-KJ50VEHZ -E1 ➔ MUFZ-KJ50VEHZ -E2

1. Model name has been changed.

MUFZ-KJ25VEHZ -ER1 ➔ MUFZ-KJ25VEHZ -ER2
MUFZ-KJ35VEHZ -ER1 ➔ MUFZ-KJ35VEHZ -ER2
MUFZ-KJ50VEHZ -ER1 ➔ MUFZ-KJ50VEHZ -ER2

1. Model name has been changed.

MUFZ-KJ25VEHZ -ET1 ➔ MUFZ-KJ25VEHZ -ET2
MUFZ-KJ35VEHZ -ET1 ➔ MUFZ-KJ35VEHZ -ET2
MUFZ-KJ50VEHZ -ET1 ➔ MUFZ-KJ50VEHZ -ET2

1. Model name has been changed.

2 PART NAMES AND FUNCTIONS

MUFZ-KJ25VEHZ
MUFZ-KJ35VEHZ

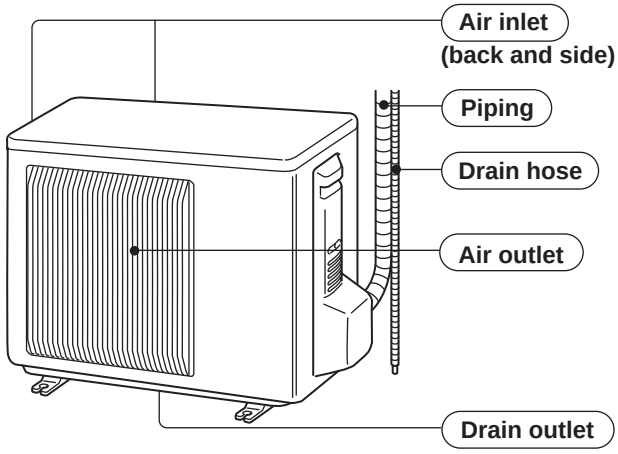

MUFZ-KJ50VEHZ

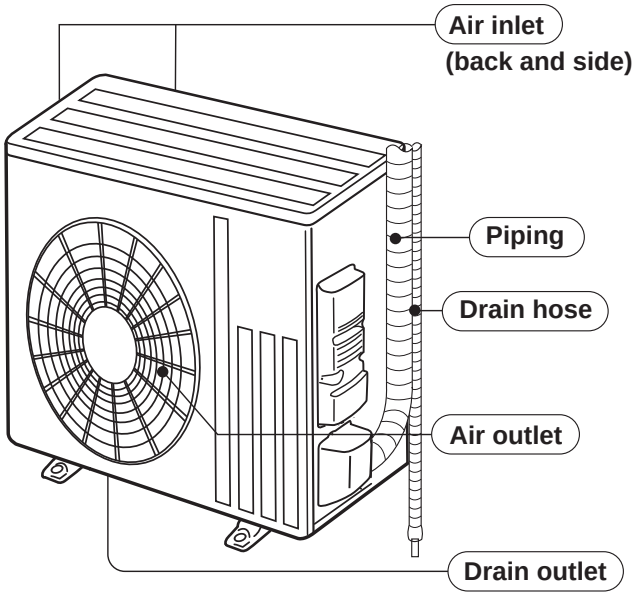

3 SPECIFICATION

Outdoor model				MUFZ-KJ25VEHZ	MUFZ-KJ35VEHZ	MUFZ-KJ50VEHZ
Power supply				Single phase, 230 V, 50 Hz		
Capacity Rated frequency (Min.-Max.)		Cooling	kW	2.5 (0.5 - 3.4)	3.5 (0.5 - 3.7)	5.0 (1.6 - 5.7)
		Heating		3.4 (1.2 - 5.1)	4.3 (1.2 - 5.8)	6.0 (2.2 - 8.4)
Breaker Capacity			A	10	12	16
Electrical data	Power input ✻1 (Set)	Cooling	W	540	940	1,410
		Heating		770	1,100	1,610
	Running current ✻1 (Set)	Cooling	A	2.7	4.2	6.2
		Heating		3.7	5.0	7.1
	Power factor ✻1 (Set)	Cooling	%	87	98	
		Heating		91	94	98
	Starting current ✻1 (Set)		A	3.7	5.0	7.1
Coefficient of performance (COP) ✻1 (Set)		Cooling		4.63	3.72	3.55
		Heating		4.42	3.91	3.73
Compressor	Model			SNB140FRUMT		SNB172FEKMT
	Output		W	950		1,200
	Current ✻1	Cooling	A	2.25	3.75	5.18
		Heating		3.17	4.56	5.94
	Refrigeration oil (Model)		L	0.35 (FV50S)		0.4 (FV50S)
Fan motor	Model			RC0J50-CI		RC0J60-BC
	Current ✻1	Cooling	A	0.28		0.82
		Heating		0.31		0.82
Dimensions W × H × D			mm	800 × 550 × 285		840 × 880 × 330
Weight			kg	37		55
Special remarks	Dehumidification	Cooling	L/h	0.6	1.4	2.0
	Air flow ✻1	Cooling Med.	m^3/h	1,806		2,748
		Cooling Low		1,038		1,632
		Heating High		2,016		2,856
		Heating Med.		1,710		2,748
		Heating Low		1,326		2,274
	Sound level ✻1	Cooling	dB(A)	46	47	49
		Heating		51		
	Fan speed	Cooling Med.	rpm	810		780
		Cooling Low		490		480
		Heating High		900		810
		Heating Med.		770		780
		Heating Low		610		650
	Fan speed regulator			3		
	Refrigerant filling capacity (R410A)		kg	1.10		1.50

NOTE: Test conditions are based on ISO 5151.

Cooling: Indoor Dry-bulb temperature 27°C Wet-bulb temperature 19°C
Outdoor Dry-bulb temperature 35°C
Heating: Indoor Dry-bulb temperature 20°C
Outdoor Dry-bulb temperature 7°C Wet-bulb temperature 6°C
Refrigerant piping length (one way): 5 m
✻1 Measured under rated operating frequency.

Specifications and rated conditions of main electric parts

Item \ Model		MUFZ-KJ25VEHZ	MUFZ-KJ35VEHZ
Smoothing capacitor	(C61, C62)	600 μF/ 620 μF 420 V	
Diode module	(DB61)	15 A 600 V	
Fuse	(F61)	T20AL250V	
	(F701, F801, F901)	T3.15AL250V	
Defrost heater	(H)	230 V 130 W	
Power module	(IC700)	15 A 600 V	
	(IC932)	8A600V	
Expansion valve coil	(LEV)	12 V DC	
Reactor	(L61)	23 mH	
Power factor controller	(IC820)	20A 600V	
Circuit protection	(PTC64, PTC65)	33 Ω	
Terminal block	(TB)	5 P	
Relay	(X63)	3 A 250 V	
	(X64)	20 A 250 V	
	(X66)	3 A 250 V	
	(X69)	10A 250V	
R.V. coil	(21S4)	220 - 240 V AC	
Heater protector	(26H)	Open 45°C	

Specifications and rated conditions of main electric parts

Item \ Model		MUFZ-KJ50VEHZ
Smoothing capacitor	(CB1, CB2, CB3)	560 μF 450 V
Fuse	(F601, F880, F901)	T3.15AL250 V
Defrost heater	(H)	230 V 120 W
IGBT module	(IC932)	5 A 600 V
	(IC700)	20 A 600 V
Expansion valve coil	(LEV)	12 V DC
Reactor	(L)	340 μH
Diode module	(IC820)	20 A 600 V
Circuit protection	(PTC64, PTC65)	33 Ω
Terminal block	(TB1, TB2)	3 P
Relay	(X64)	20 A 250 V
	(X65)	20 A 250 V
	(X69)	10 A 250 V
	(X601)	3 A 250 V
	(X602)	3 A 250 V
R.V. coil	(21S4)	220 - 240 V AC
Heater protector	(26H)	Open 45 °C

4 NOISE CRITERIA CURVES

MUFZ-KJ25VEHZ

FUNCTION	SPL(dB(A))	LINE
COOLING	46	●——●
HEATING	51	○——○

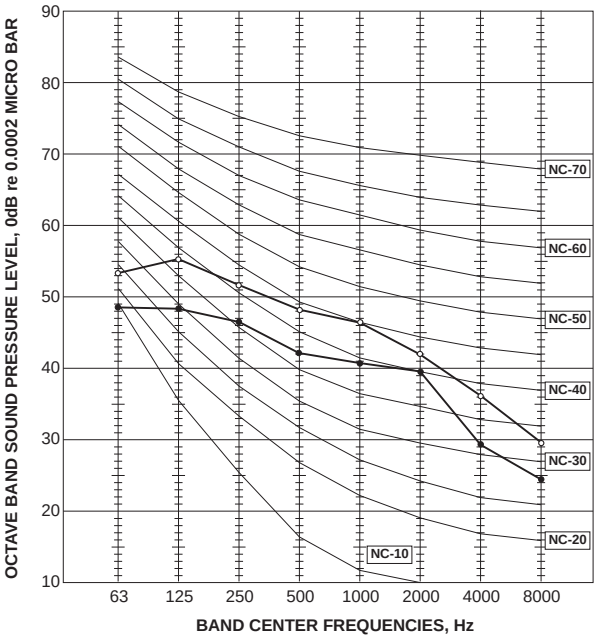

MUFZ-KJ35VEHZ

FUNCTION	SPL(dB(A))	LINE
COOLING	47	●——●
HEATING	51	○——○

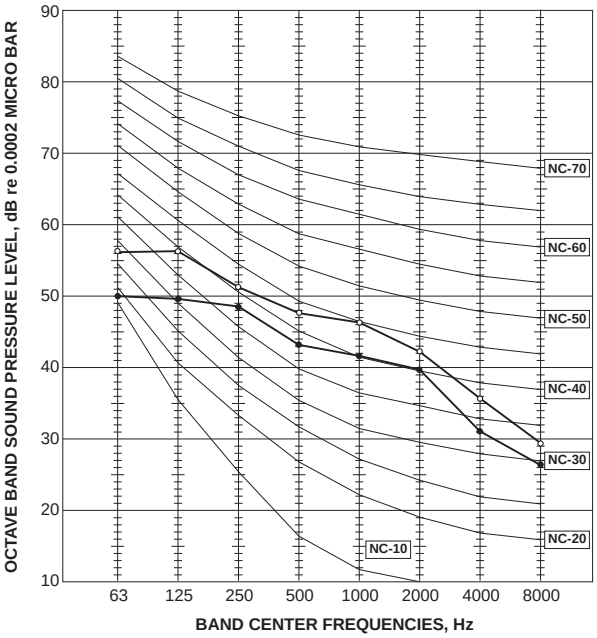

MUFZ-KJ50VEHZ

FUNCTION	SPL(dB(A))	LINE
COOLING	49	●——●
HEATING	51	○——○

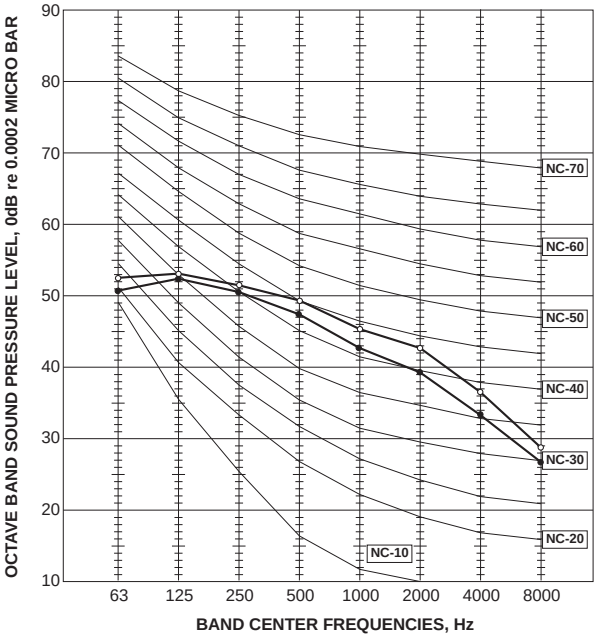

Test conditions

Cooling: Dry-bulb temperature 35°C

Heating: Dry-bulb temperature 7°C Wet-bulb temperature 6°C

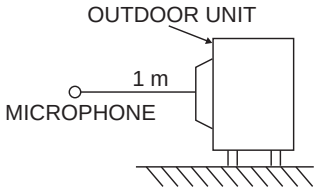

5 OUTLINES AND DIMENSIONS

MUFZ-KJ25VEHZ
MUFZ-KJ35VEHZ

Unit: mm

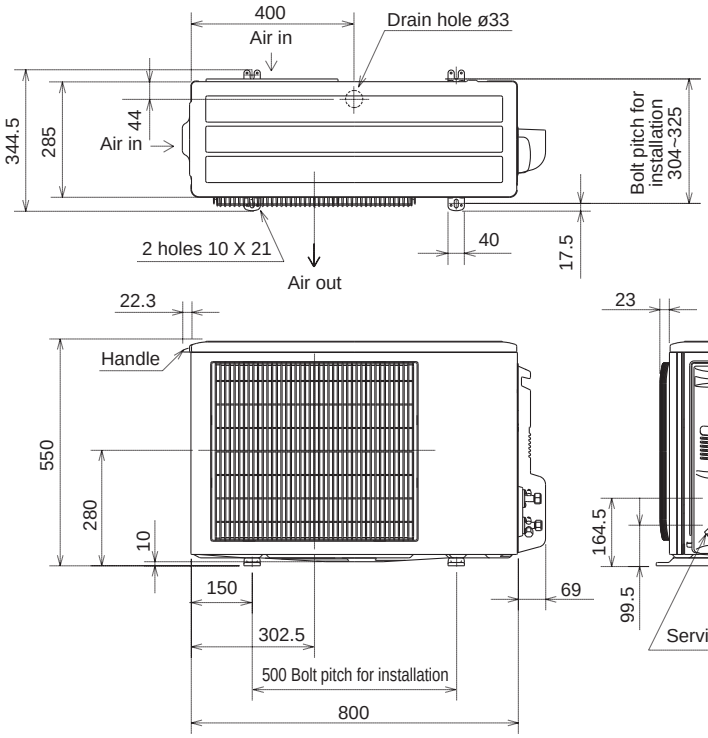

REQUIRED SPACE

*1 100 mm or more when front and sides of the unit are clear

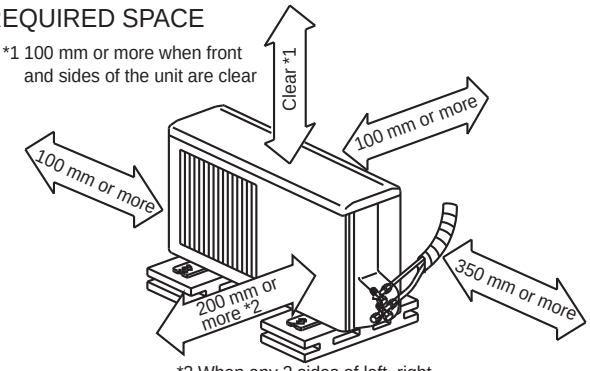

*2 When any 2 sides of left, right and rear of the unit are clear

MUFZ-KJ50VEHZ

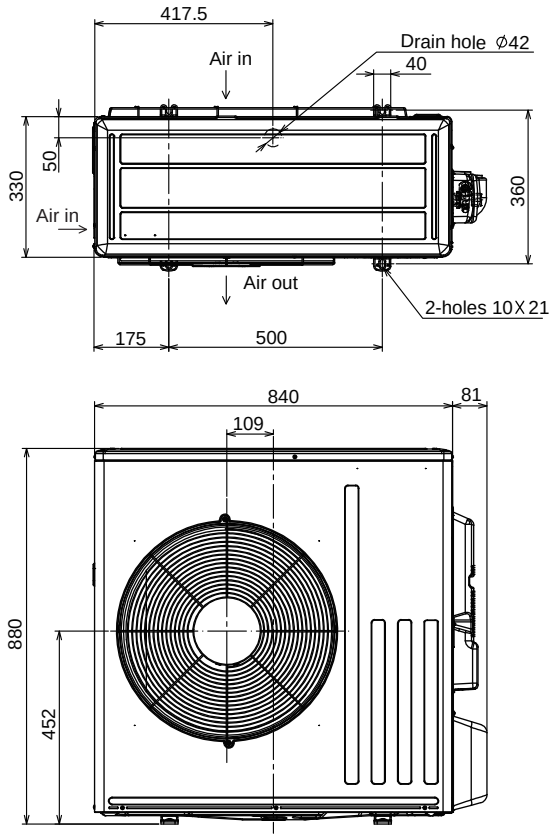

REQUIRED SPACE

*1 500 mm or more when front and sides of the unit are clear

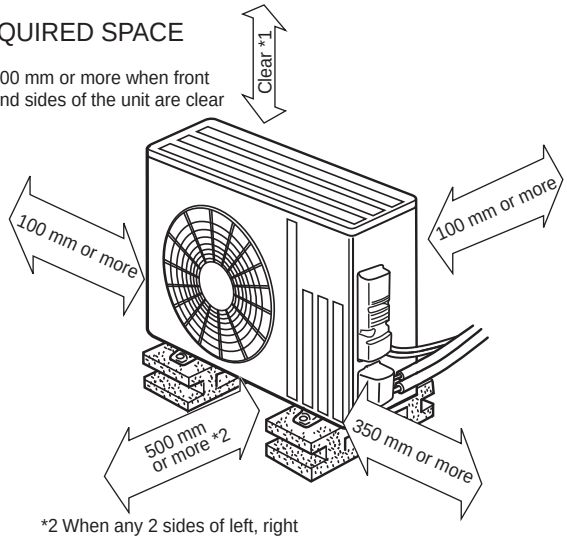

*2 When any 2 sides of left, right and rear of the unit are clear

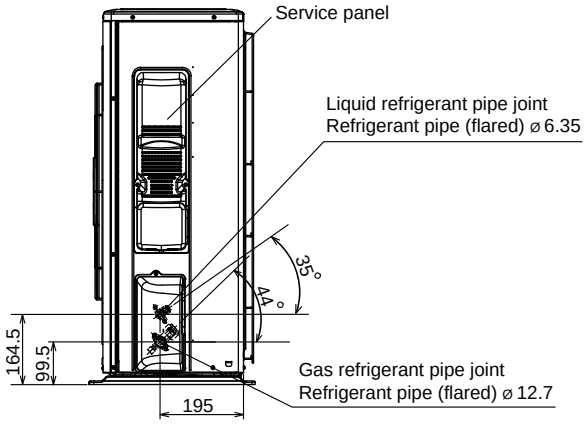

6 WIRING DIAGRAM

MUFZ-KJ25VEHZ - E1, ER1, ET1
MUFZ-KJ35VEHZ - E1, ER1, ET1

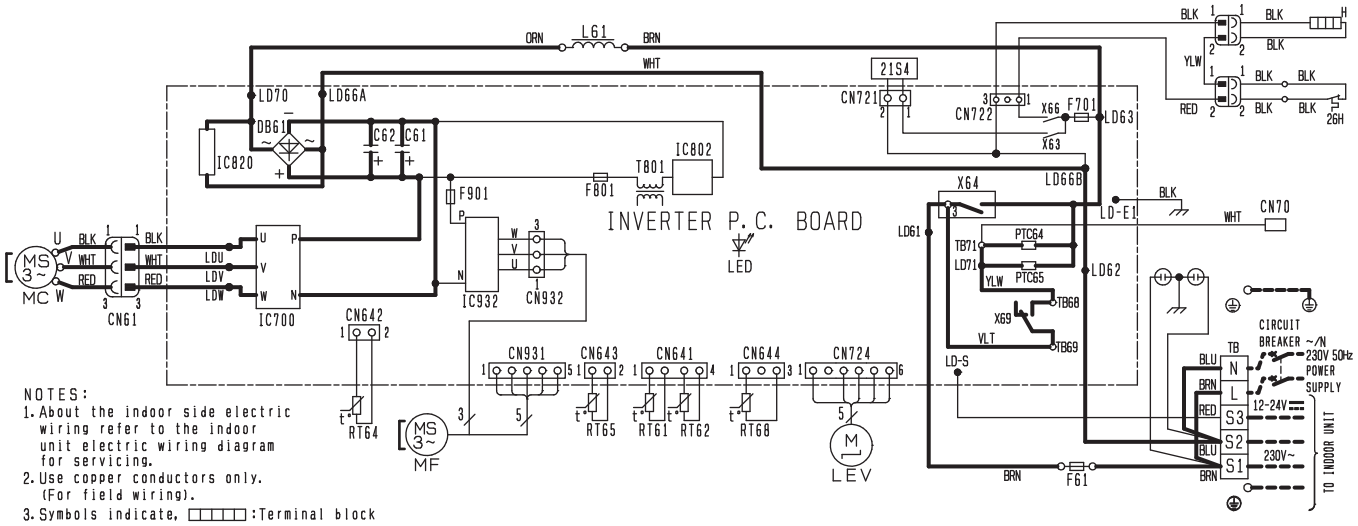

NOTES:
1. About the indoor side electric wiring refer to the indoor unit electric wiring diagram for servicing.
2. Use copper conductors only. (For field wiring).
3. Symbols indicate, ▭▭▭▭ :Terminal block

SYMBOL	NAME	SYMBOL	NAME	SYMBOL	NAME
CN70	CONNECTOR	LED	LED	RT65	AMBIENT TEMP. THERMISTOR
C61, C62	SMOOTHING CAPACITOR	LEV	EXPANSION VALVE COIL	RT68	OUTDOOR HEAT EXCHANGER TEMP. THERMISTOR.
DB61	DIODE MODULE	L61	REACTOR		
F61	FUSE (T20AL250V)	MC	COMPRESSOR	TB	TERMINAL BLOCK
F701, F801, F901	FUSE (T3.15AL250V)	MF	FAN MOTOR	T801	TRANSFORMER
H	DEFROST HEATER	PTC64, PTC65	CIRCUIT PROTECTION	X63, X64 X66, X69	RELAY
IC700, IC820 IC932	POWER MODULE	RT61	DEFROST THERMISTOR		
		RT62	DISCHARGE TEMP. THERMISTOR	21S4	REVERSING VALVE COIL
IC802	POWER DEVICE	RT64	FIN TEMP. THERMISTOR	26H	HEATER PROTECTOR

MUFZ-KJ25VEHZ - E2, ER2, ET2
MUFZ-KJ35VEHZ - E2, ER2, ET2

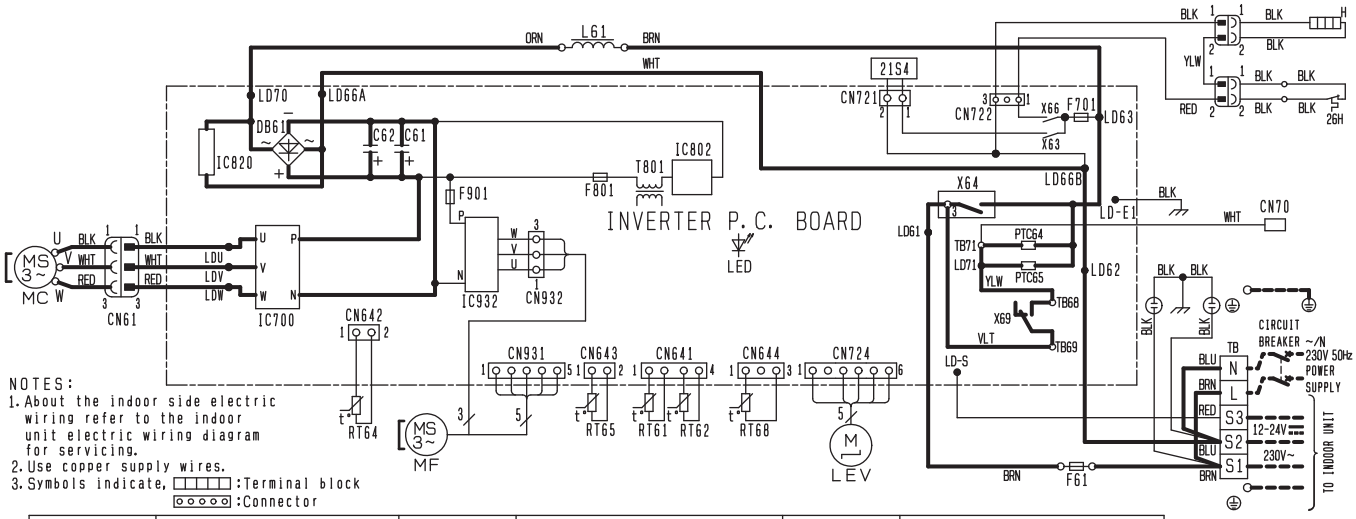

SYMBOL	NAME	SYMBOL	NAME	SYMBOL	NAME
CN70	CONNECTOR	LED	LED	RT65	AMBIENT TEMP. THERMISTOR
C61, C62	SMOOTHING CAPACITOR	LEV	EXPANSION VALVE COIL	RT68	OUTDOOR HEAT EXCHANGER TEMP. THERMISTOR.
DB61	DIODE MODULE	L61	REACTOR		
F61	FUSE (T20AL250V)	MC	COMPRESSOR	TB	TERMINAL BLOCK
F701, F801, F901	FUSE (T3.15AL250V)	MF	FAN MOTOR	T801	TRANSFORMER
H	DEFROST HEATER	PTC64, PTC65	CIRCUIT PROTECTION	X63, X64 X66, X69	RELAY
IC700, IC820 IC932	POWER MODULE	RT61	DEFROST THERMISTOR		
		RT62	DISCHARGE TEMP. THERMISTOR	21S4	REVERSING VALVE COIL
IC802	POWER DEVICE	RT64	FIN TEMP. THERMISTOR	26H	HEATER PROTECTOR

MUFZ-KJ50VEHZ - E1, ER1, ET1

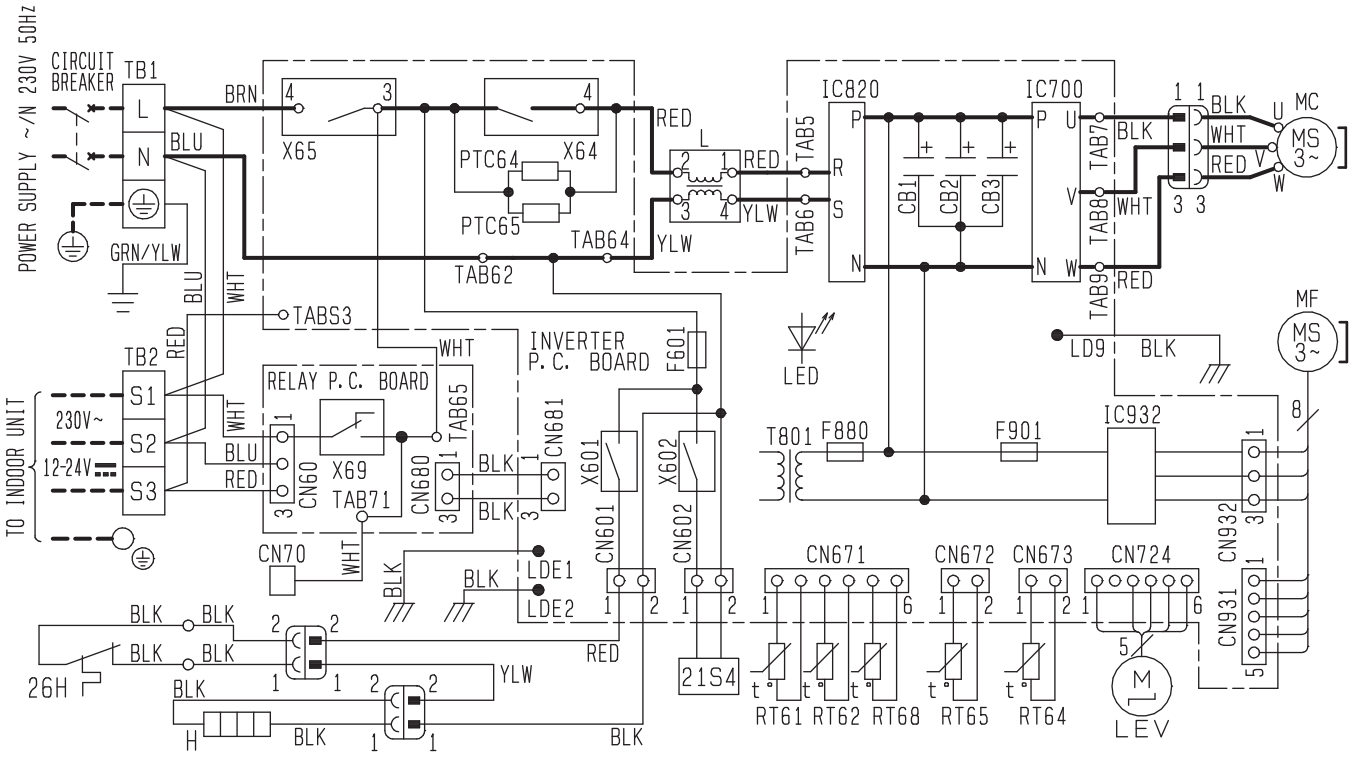

SYMBOL	NAME	SYMBOL	NAME	SYMBOL	NAME	SYMBOL	NAME
CB1~3	SMOOTHING CAPACITOR	IC932	IGBT Module	RT61	DEFROST THERMISTOR	X601	RELAY
CN70	CONNECTOR	L	REACTOR	RT62	DISCHARGE TEMP. THERMISTOR	X602	RELAY
F601	FUSE(T3.15AL250V)	LED	LED	RT64	FIN TEMP. THERMISTOR	X64	RELAY
F880	FUSE(T3.15AL250V)	LEV	EXPANSION VALVE COIL	RT65	AMBIENT TEMP. THERMISTOR	X65	RELAY
F901	FUSE(T3.15AL250V)	MC	COMPRESSOR	RT68	OUTDOOR HEAT EXCHANGER TEMP. THERMISTOR	X69	RELAY
H	DEFROST HEATER	MF	FAN MOTOR			21S4	REVERSING VALVE COIL
IC700	IGBT Module	PTC64	CIRCUIT PROTECTION	TB1, TB2	TERMINAL BLOCK	26H	HEATER PROTECTOR
IC820	DIODE Module	PTC65	CIRCUIT PROTECTION	T801	TRANSFORMER		

NOTES 1. About the indoor side electric wiring, refer to the indoor unit electric wiring diagram for servicing.
2. Use copper conductors only(for field wiring). 3. Symbols indicate, ☐☐☐:Terminal block

MUFZ-KJ50VEHZ - E2, ER2, ET2

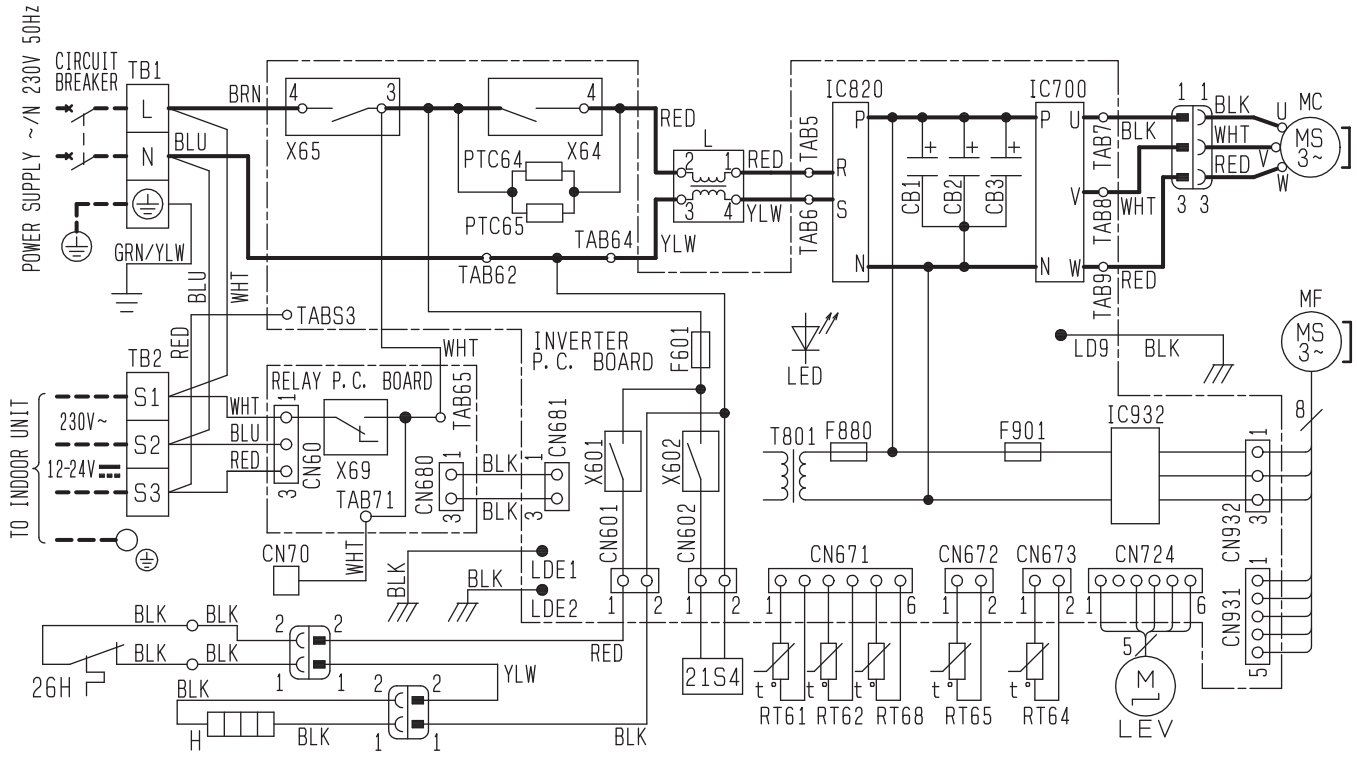

SYMBOL	NAME	SYMBOL	NAME	SYMBOL	NAME	SYMBOL	NAME
CB1~3	SMOOTHING CAPACITOR	IC932	IGBT Module	RT61	DEFROST THERMISTOR	X601	RELAY
CN70	CONNECTOR	L	REACTOR	RT62	DISCHARGE TEMP. THERMISTOR	X602	RELAY
F601	FUSE (T3. 15AL250V)	LED	LED	RT64	FIN TEMP. THERMISTOR	X64	RELAY
F880	FUSE (T3. 15AL250V)	LEV	EXPANSION VALVE COIL	RT65	AMBIENT TEMP. THERMISTOR	X65	RELAY
F901	FUSE (T3. 15AL250V)	MC	COMPRESSOR	RT68	OUTDOOR HEAT EXCHANGER TEMP. THERMISTOR	X69	RELAY
H	DEFROST HEATER	MF	FAN MOTOR			21S4	REVERSING VALVE COIL
IC700	IGBT Module	PTC64	CIRCUIT PROTECTION	TB1, TB2	TERMINAL BLOCK	26H	HEATER PROTECTOR
IC820	DIODE Module	PTC65	CIRCUIT PROTECTION	T801	TRANSFORMER		

NOTES 1. About the indoor side electric wiring, refer to the indoor unit electric wiring diagram for servicing.
2. Use copper supply wires. 3. Symbols indicate, ☐☐☐ :Terminal block ⊙⊙⊙ :Connector

7 REFRIGERANT SYSTEM DIAGRAM

MUFZ-KJ25VEHZ
MUFZ-KJ35VEHZ

Unit: mm

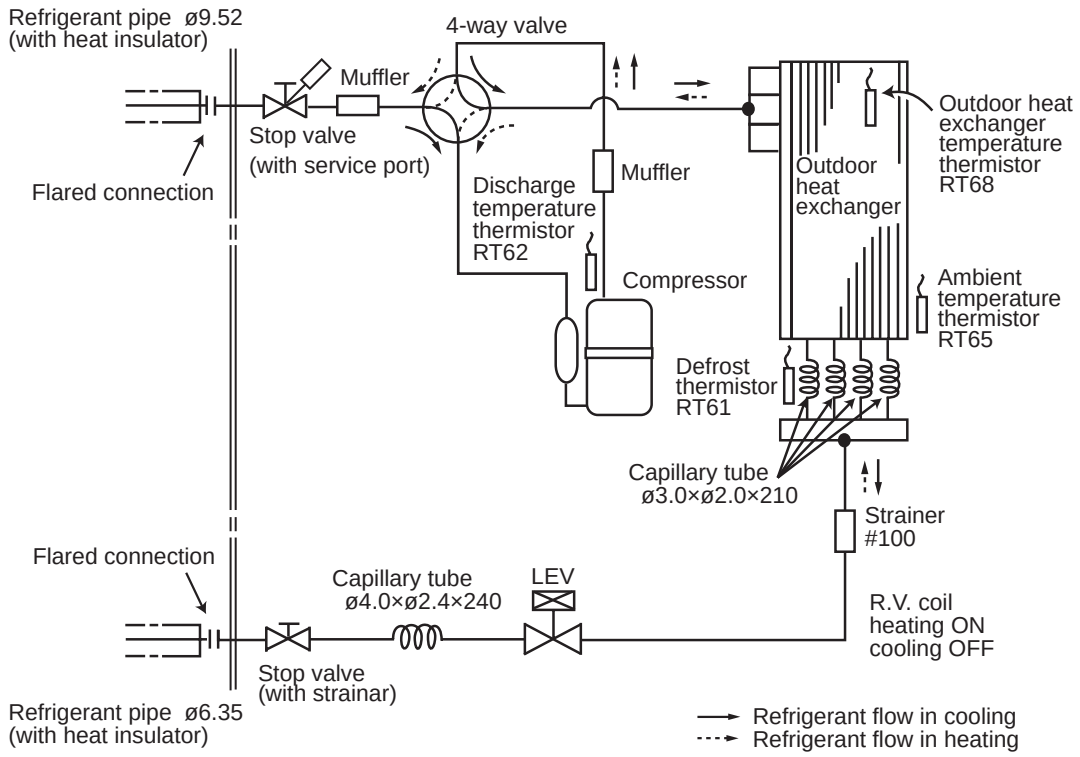

MUFZ-KJ50VEHZ

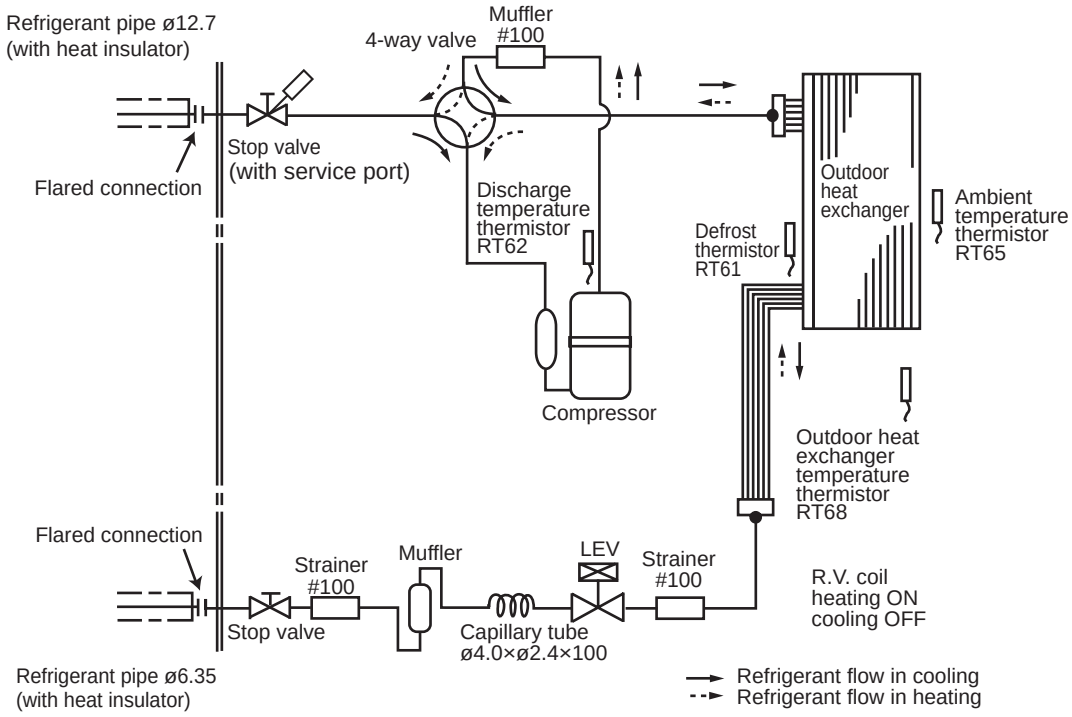

MAX. REFRIGERANT PIPING LENGTH and MAX. HEIGHT DIFFERENCE

Model	Refrigerant piping: m		Piping size O.D: mm	
	Max. Length A	Max. Height difference B	Gas	Liquid
MUFZ-KJ25/35	20	12	9.52	6.35
MUFZ-KJ50	30	15	12.7	6.35

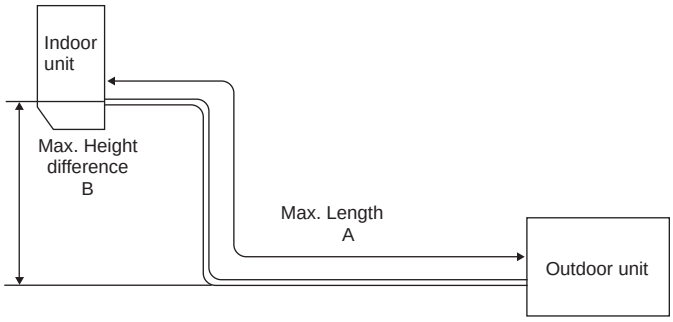

ADDITIONAL REFRIGERANT CHARGE (R410A: g)

Model	Outdoor unit precharged	Refrigerant piping length (one way)									
		7 m	8 m	9 m	10 m	11 m	12 m	13 m	14 m	15 m	20 m
MUFZ-KJ25/35	1,100	0	30	60	90	120	150	180	210	240	390

Calculation: X g = 30 g/m × (Refrigerant piping length (m) - 7)

Model	Outdoor unit precharged	Refrigerant piping length (one way)					
		7 m	10 m	15 m	20 m	25 m	30 m
MUFZ-KJ50	1,500	0	60	160	260	360	460

Calculation: X g = 20 g/m × (Refrigerant piping length (m) – 7)

8 PERFORMANCE CURVES

MUFZ-KJ25VEHZ
MUFZ-KJ35VEHZ
MUFZ-KJ50VEHZ

The standard specifications apply only to the operation of the air conditioner under normal conditions. Since operating conditions vary according to the areas where these units are installed, the following information has been provided to clarify the operating characteristics of the air conditioner under the conditions indicated by the performance curve.

(1) GUARANTEED VOLTAGE

198 ~ 264 V, 50 Hz

(2) AIR FLOW

Air flow should be set at MAX.

(3) MAIN READINGS

(1) Indoor intake air wet-bulb temperature:	°C [WB]	Cooling
(2) Indoor outlet air wet-bulb temperature:	°C [WB]	Cooling
(3) Outdoor intake air dry-bulb temperature:	°C [DB]	Cooling
(4) Total input:	W	Cooling
(5) Indoor intake air dry-bulb temperature:	°C [DB]	Heating
(6) Outdoor intake air wet-bulb temperature:	°C [WB]	Heating
(7) Total input:	W	Heating

Indoor air wet and dry bulb temperature difference on the left side of the following chart shows the difference between the indoor intake air wet and dry bulb temperature and the indoor outlet air wet and dry bulb temperature for your reference at service.

How to measure the indoor air wet and dry bulb temperature difference

1. Attach at least 2 sets of wet and dry bulb thermometers to the indoor air intake as shown in the figure, and at least 2 sets of wet and dry bulb thermometers to the indoor air outlet. The thermometers must be attached to the position where air speed is high.
2. Attach at least 2 sets of wet and dry bulb thermometers to the outdoor air intake.
   Cover the thermometers to prevent direct rays of the sun.
3. Check that the air filter is cleaned.
4. Open windows and doors of room.
5. Press the EMERGENCY OPERATION switch once (twice) to start the EMERGENCY COOL (HEAT) MODE.
6. When system stabilizes after more than 15 minutes, measure temperature and take an average temperature.
7. 10 minutes later, measure temperature again and check that the temperature does not change.

INDOOR UNIT

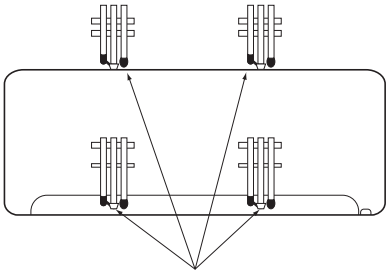

Wet and dry bulb thermometers
FRONT VIEW

OUTDOOR UNIT

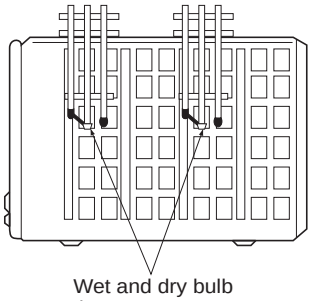

Wet and dry bulb thermometers
BACK VIEW

8-1. CAPACITY AND INPUT CURVES

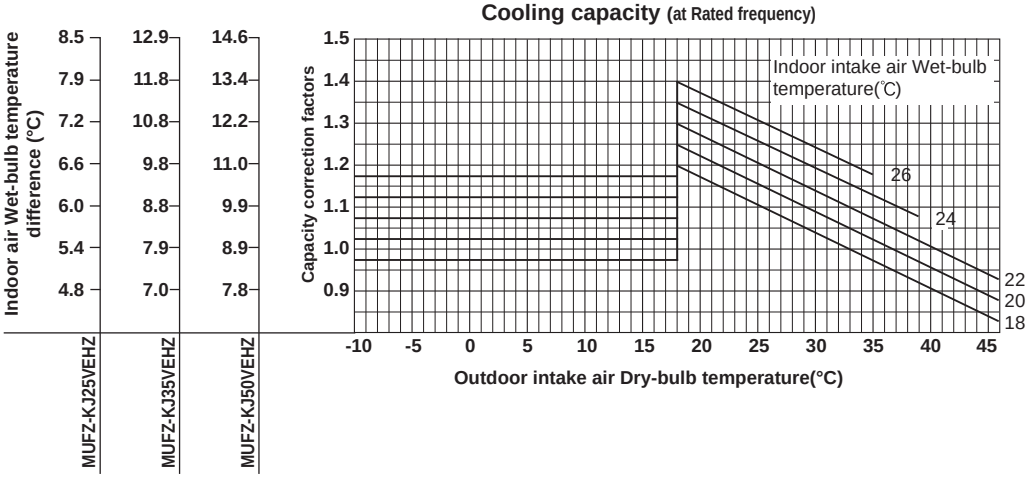

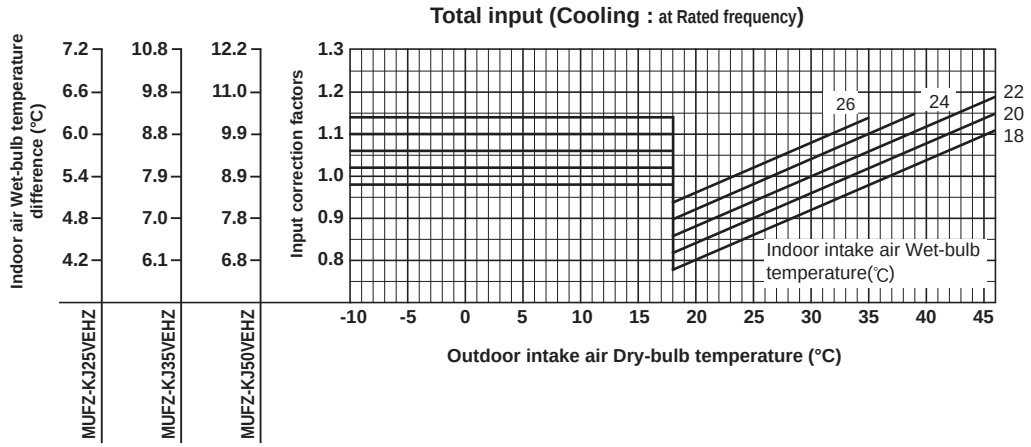

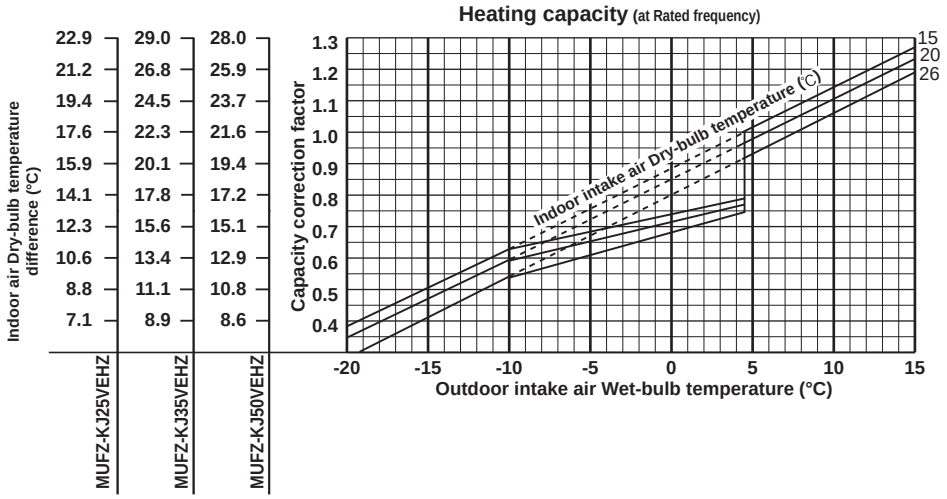

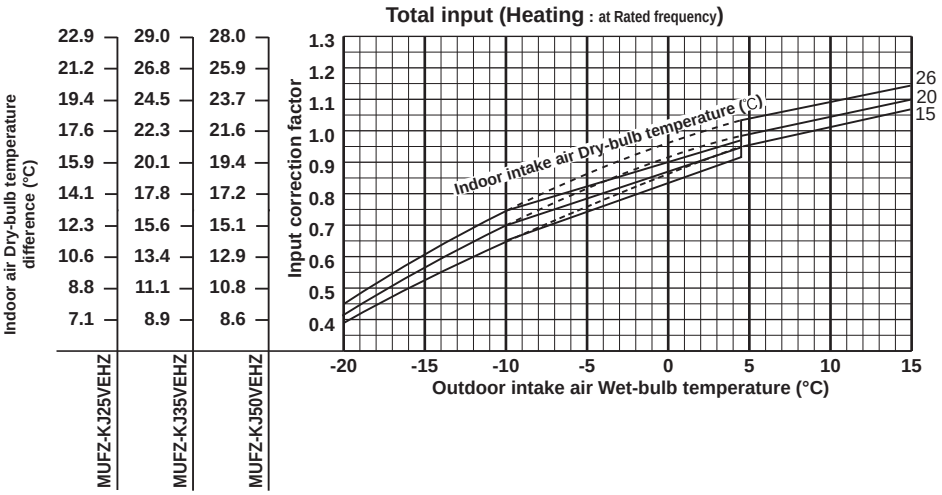

NOTE: The above broken lines are for the heating operation without any frost and defrost operation.

8-2. CAPACITY AND INPUT CORRECTION BY OPERATIONAL FREQUENCY OF COMPRESSOR

MUFZ-KJ25VEHZ

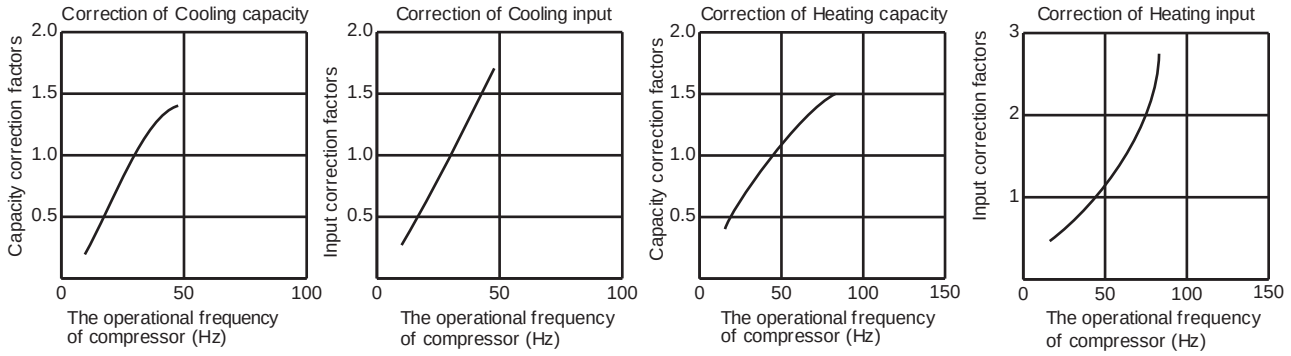

MUFZ-KJ35VEHZ

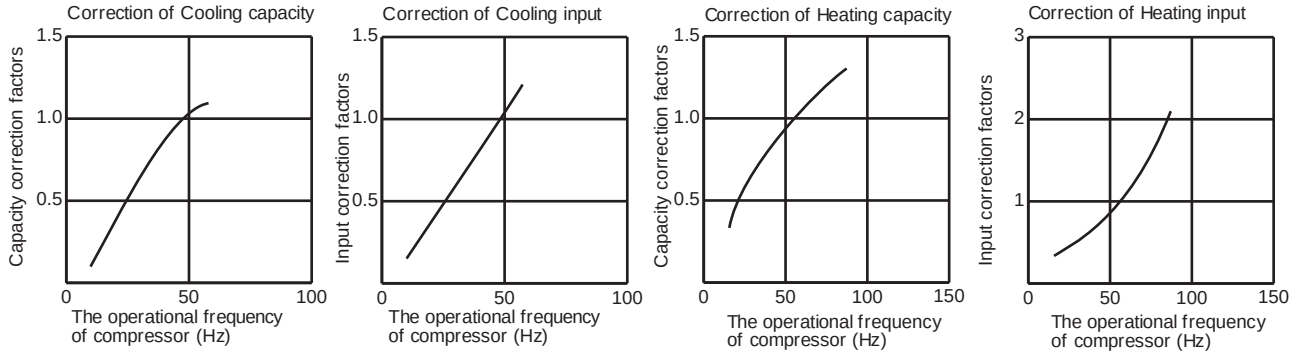

MUFZ-KJ50VEHZ

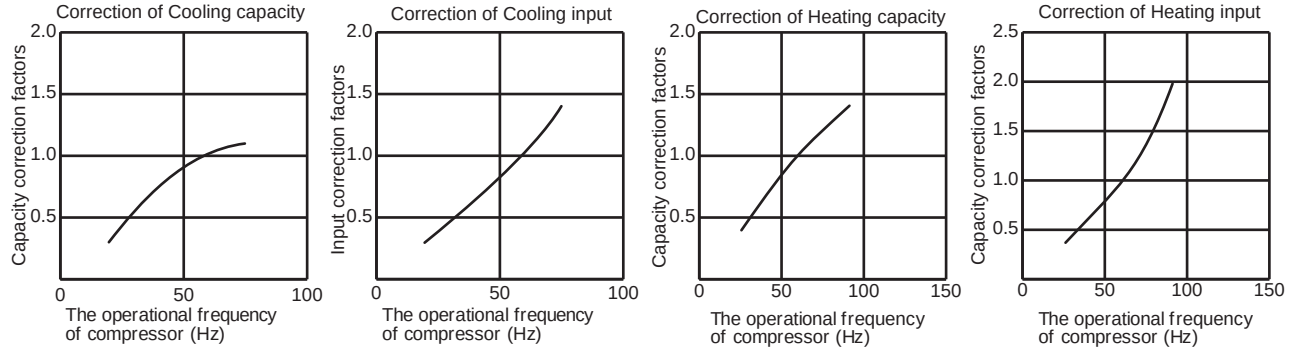

8-3. HOW TO OPERATE FIXED-FREQUENCY OPERATION

<Test run operation>

1. Press EMERGENCY OPERATION switch to start COOL or HEAT mode (COOL: Press once, HEAT: Press twice).
2. Test run operation starts and continues to operate for 30 minutes.
3. Compressor operates at rated frequency in COOL mode or 58 Hz in HEAT mode.
4. Indoor fan operates at High speed.
5. After 30 minutes, test run operation finishes and EMERGENCY OPERATION starts (operation frequency of compressor varies).
6. To cancel test run operation (EMERGENCY OPERATION), press EMERGENCY OPERATION switch or any button on the remote controller.

8-4. OUTDOOR LOW PRESSURE AND OUTDOOR UNIT CURRENT

COOL operation

① Both indoor and outdoor unit are under the same temperature/ humidity condition.
② Operation: TEST RUN OPERATION (Refer to 8-3.)

Dry-bulb temperature (°C)	Relative humidity (%)
20	50
25	60
30	70

Outdoor low pressure

MUFZ-KJ25VEHZ

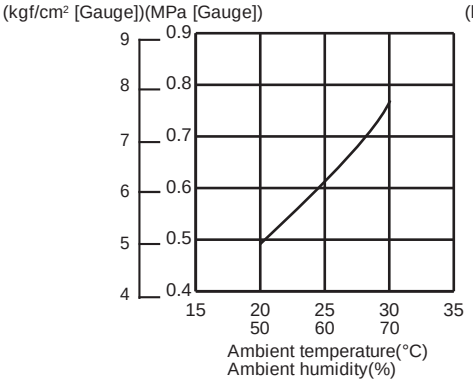

MUFZ-KJ35VEHZ

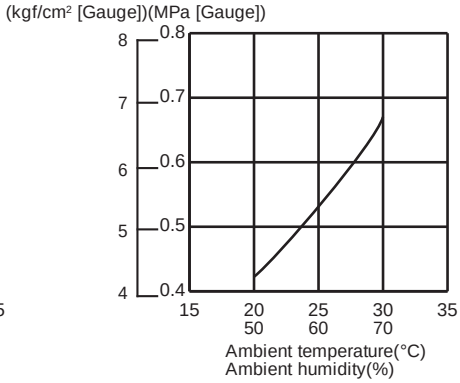

MUFZ-KJ50VEHZ

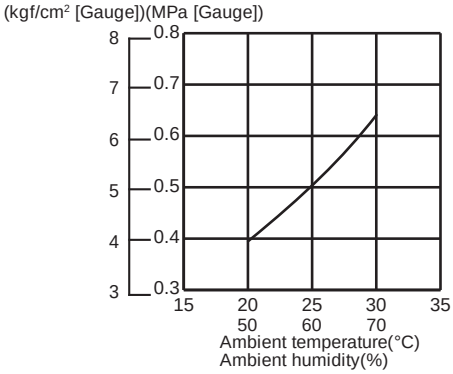

NOTE:
The unit of pressure has been changed to MPa on the international system of units (SI unit system)
The conversion factor is: **1 (MPa [Gauge]) = 10.2 (kgf/cm^2 [Gauge])**

Outdoor unit current

MUFZ-KJ25VEHZ

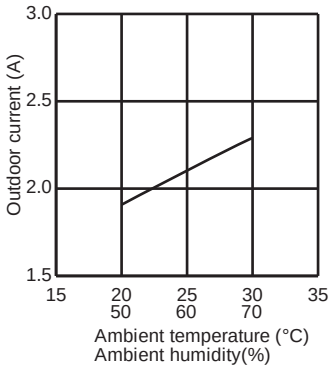

MUFZ-KJ35VEHZ

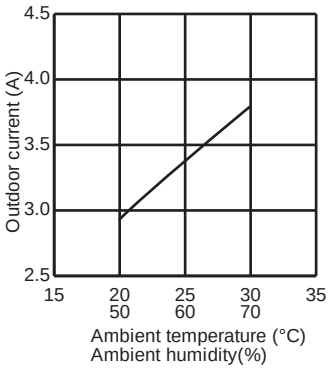

MUFZ-KJ50VEHZ

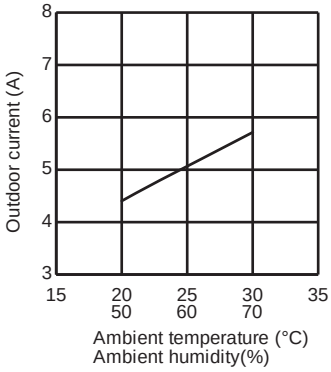

HEAT operation

① Condition:

	Indoor	Outdoor			
Dry bulb temperature (°C)	20.0	2	7	15	20.0
Wet bulb temperature (°C)	14.5	1	6	12	14.5

② Operation: Test run operation (Refer to 8-3.)

Outdoor unit current

MUFZ-KJ25VEHZ

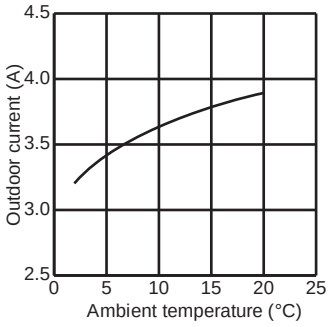

MUFZ-KJ35VEHZ

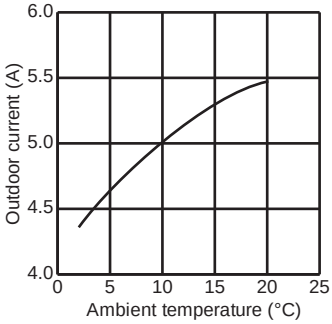

MUFZ-KJ50VEHZ

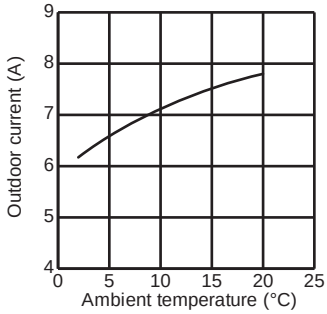

PERFORMANCE DATA COOL operation at Rated frequency

MUFZ-KJ25VEHZ

CAPACITY: 2.5 kW SHF: 0.85 INPUT: 540 W

INDOOR DB (°C)	INDOOR WB (°C)	OUTDOOR DB (°C)															
		21				25				27				30			
		Q	SHC	SHF	INPUT	Q	SHC	SHF	INPUT	Q	SHC	SHF	INPUT	Q	SHC	SHF	INPUT
21	18	2.94	1.97	0.67	432	2.81	1.88	0.67	454	2.70	1.81	0.67	475	2.60	1.74	0.67	497
21	20	3.06	1.68	0.55	454	2.94	1.62	0.55	481	2.85	1.57	0.55	491	2.75	1.51	0.55	513
22	18	2.94	2.09	0.71	432	2.81	2.00	0.71	454	2.70	1.92	0.71	475	2.60	1.85	0.71	497
22	20	3.06	1.81	0.59	454	2.94	1.73	0.59	481	2.85	1.68	0.59	491	2.75	1.62	0.59	513
22	22	3.19	1.50	0.47	470	3.08	1.45	0.47	500	3.00	1.41	0.47	513	2.88	1.35	0.47	535
23	18	2.94	2.20	0.75	432	2.81	2.11	0.75	454	2.70	2.03	0.75	475	2.60	1.95	0.75	497
23	20	3.06	1.93	0.63	454	2.94	1.85	0.63	481	2.85	1.80	0.63	491	2.75	1.73	0.63	513
23	22	3.19	1.63	0.51	470	3.08	1.57	0.51	500	3.00	1.53	0.51	513	2.88	1.47	0.51	535
24	18	2.94	2.32	0.79	432	2.81	2.22	0.79	454	2.70	2.13	0.79	475	2.60	2.05	0.79	497
24	20	3.06	2.05	0.67	454	2.94	1.97	0.67	481	2.85	1.91	0.67	491	2.75	1.84	0.67	513
24	22	3.19	1.75	0.55	470	3.08	1.69	0.55	500	3.00	1.65	0.55	513	2.88	1.58	0.55	535
24	24	3.35	1.44	0.43	491	3.23	1.39	0.43	518	3.15	1.35	0.43	535	3.05	1.31	0.43	562
25	18	2.94	2.44	0.83	432	2.81	2.33	0.83	454	2.70	2.24	0.83	475	2.60	2.16	0.83	497
25	20	3.06	2.17	0.71	454	2.94	2.09	0.71	481	2.85	2.02	0.71	491	2.75	1.95	0.71	513
25	22	3.19	1.88	0.59	470	3.08	1.81	0.59	500	3.00	1.77	0.59	513	2.88	1.70	0.59	535
25	24	3.35	1.57	0.47	491	3.23	1.52	0.47	518	3.15	1.48	0.47	535	3.05	1.43	0.47	562
26	18	2.94	2.56	0.87	432	2.81	2.45	0.87	454	2.70	2.35	0.87	475	2.60	2.26	0.87	497
26	20	3.06	2.30	0.75	454	2.94	2.20	0.75	481	2.85	2.14	0.75	491	2.75	2.06	0.75	513
26	22	3.19	2.01	0.63	470	3.08	1.94	0.63	500	3.00	1.89	0.63	513	2.88	1.81	0.63	535
26	24	3.35	1.71	0.51	491	3.23	1.64	0.51	518	3.15	1.61	0.51	535	3.05	1.56	0.51	562
26	26	3.45	1.35	0.39	518	3.35	1.31	0.39	545	3.30	1.29	0.39	562	3.20	1.25	0.39	578
27	18	2.94	2.67	0.91	432	2.81	2.56	0.91	454	2.70	2.46	0.91	475	2.60	2.37	0.91	497
27	20	3.06	2.42	0.79	454	2.94	2.32	0.79	481	2.85	2.25	0.79	491	2.75	2.17	0.79	513
27	22	3.19	2.14	0.67	470	3.08	2.06	0.67	500	3.00	2.01	0.67	513	2.88	1.93	0.67	535
27	24	3.35	1.84	0.55	491	3.23	1.77	0.55	518	3.15	1.73	0.55	535	3.05	1.68	0.55	562
27	26	3.45	1.48	0.43	518	3.35	1.44	0.43	545	3.30	1.42	0.43	562	3.20	1.38	0.43	578
28	18	2.94	2.79	0.95	432	2.81	2.67	0.95	454	2.70	2.57	0.95	475	2.60	2.47	0.95	497
28	20	3.06	2.54	0.83	454	2.94	2.44	0.83	481	2.85	2.37	0.83	491	2.75	2.28	0.83	513
28	22	3.19	2.26	0.71	470	3.08	2.18	0.71	500	3.00	2.13	0.71	513	2.88	2.04	0.71	535
28	24	3.35	1.98	0.59	491	3.23	1.90	0.59	518	3.15	1.86	0.59	535	3.05	1.80	0.59	562
28	26	3.45	1.62	0.47	518	3.35	1.57	0.47	545	3.30	1.55	0.47	562	3.20	1.50	0.47	578
29	18	2.94	2.91	0.99	432	2.81	2.78	0.99	454	2.70	2.67	0.99	475	2.60	2.57	0.99	497
29	20	3.06	2.66	0.87	454	2.94	2.56	0.87	481	2.85	2.48	0.87	491	2.75	2.39	0.87	513
29	22	3.19	2.39	0.75	470	3.08	2.31	0.75	500	3.00	2.25	0.75	513	2.88	2.16	0.75	535
29	24	3.35	2.11	0.63	491	3.23	2.03	0.63	518	3.15	1.98	0.63	535	3.05	1.92	0.63	562
29	26	3.45	1.76	0.51	518	3.35	1.71	0.51	545	3.30	1.68	0.51	562	3.20	1.63	0.51	578
30	18	2.94	2.94	1.00	432	2.81	2.81	1.00	454	2.70	2.70	1.00	475	2.60	2.60	1.00	497
30	20	3.06	2.79	0.91	454	2.94	2.67	0.91	481	2.85	2.59	0.91	491	2.75	2.50	0.91	513
30	22	3.19	2.52	0.79	470	3.08	2.43	0.79	500	3.00	2.37	0.79	513	2.88	2.27	0.79	535
30	24	3.35	2.24	0.67	491	3.23	2.16	0.67	518	3.15	2.11	0.67	535	3.05	2.04	0.67	562
30	26	3.45	1.90	0.55	518	3.35	1.84	0.55	545	3.30	1.82	0.55	562	3.20	1.76	0.55	578
31	18	2.94	2.94	1.00	432	2.81	2.81	1.00	454	2.70	2.70	1.00	475	2.60	2.60	1.00	497
31	20	3.06	2.91	0.95	454	2.94	2.79	0.95	481	2.85	2.71	0.95	491	2.75	2.61	0.95	513
31	22	3.19	2.65	0.83	470	3.08	2.55	0.83	500	3.00	2.49	0.83	513	2.88	2.39	0.83	535
31	24	3.35	2.38	0.71	491	3.23	2.29	0.71	518	3.15	2.24	0.71	535	3.05	2.17	0.71	562
31	26	3.45	2.04	0.59	518	3.35	1.98	0.59	545	3.30	1.95	0.59	562	3.20	1.89	0.59	578
32	18	2.94	2.94	1.00	432	2.81	2.81	1.00	454	2.70	2.70	1.00	475	2.60	2.60	1.00	497
32	20	3.06	3.03	0.99	454	2.94	2.91	0.99	481	2.85	2.82	0.99	491	2.75	2.72	0.99	513
32	22	3.19	2.77	0.87	470	3.08	2.68	0.87	500	3.00	2.61	0.87	513	2.88	2.50	0.87	535
32	24	3.35	2.51	0.75	491	3.23	2.42	0.75	518	3.15	2.36	0.75	535	3.05	2.29	0.75	562
32	26	3.45	2.17	0.63	518	3.35	2.11	0.63	545	3.30	2.08	0.63	562	3.20	2.02	0.63	578

NOTE Q : Total capacity (kW) SHF : Sensible heat factor DB : Dry-bulb temperature
SHC : Sensible heat capacity (kW) INPUT : Total power input (W) WB : Wet-bulb temperature

PERFORMANCE DATA COOL operation at Rated frequency

MUFZ-KJ25VEHZ

CAPACITY: 2.5 kW SHF: 0.85 INPUT: 540 W

INDOOR DB (°C)	INDOOR WB (°C)	OUTDOOR DB (°C)											
		35				40				46			
		Q	SHC	SHF	INPUT	Q	SHC	SHF	INPUT	Q	SHC	SHF	INPUT
21	18	2.45	1.64	0.67	529	2.25	1.51	0.67	562	2.08	1.39	0.67	583
21	20	2.58	1.42	0.55	551	2.40	1.32	0.55	578	2.23	1.22	0.55	610
22	18	2.45	1.74	0.71	529	2.25	1.60	0.71	562	2.08	1.47	0.71	583
22	20	2.58	1.52	0.59	551	2.40	1.42	0.59	578	2.23	1.31	0.59	610
22	22	2.73	1.28	0.47	572	2.55	1.20	0.47	605	2.38	1.12	0.47	626
23	18	2.45	1.84	0.75	529	2.25	1.69	0.75	562	2.08	1.56	0.75	583
23	20	2.58	1.62	0.63	551	2.40	1.51	0.63	578	2.23	1.40	0.63	610
23	22	2.73	1.39	0.51	572	2.55	1.30	0.51	605	2.38	1.21	0.51	626
24	18	2.45	1.94	0.79	529	2.25	1.78	0.79	562	2.08	1.64	0.79	583
24	20	2.58	1.73	0.67	551	2.40	1.61	0.67	578	2.23	1.49	0.67	610
24	22	2.73	1.50	0.55	572	2.55	1.40	0.55	605	2.38	1.31	0.55	626
24	24	2.88	1.24	0.43	594	2.70	1.16	0.43	621	2.55	1.10	0.43	648
25	18	2.45	2.03	0.83	529	2.25	1.87	0.83	562	2.08	1.72	0.83	583
25	20	2.58	1.83	0.71	551	2.40	1.70	0.71	578	2.23	1.58	0.71	610
25	22	2.73	1.61	0.59	572	2.55	1.50	0.59	605	2.38	1.40	0.59	626
25	24	2.88	1.35	0.47	594	2.70	1.27	0.47	621	2.55	1.20	0.47	648
26	18	2.45	2.13	0.87	529	2.25	1.96	0.87	562	2.08	1.81	0.87	583
26	20	2.58	1.93	0.75	551	2.40	1.80	0.75	578	2.23	1.67	0.75	610
26	22	2.73	1.72	0.63	572	2.55	1.61	0.63	605	2.38	1.50	0.63	626
26	24	2.88	1.47	0.51	594	2.70	1.38	0.51	621	2.55	1.30	0.51	648
26	26	3.03	1.18	0.39	616	2.85	1.11	0.39	643	2.68	1.04	0.39	670
27	18	2.45	2.23	0.91	529	2.25	2.05	0.91	562	2.08	1.89	0.91	583
27	20	2.58	2.03	0.79	551	2.40	1.90	0.79	578	2.23	1.76	0.79	610
27	22	2.73	1.83	0.67	572	2.55	1.71	0.67	605	2.38	1.59	0.67	626
27	24	2.88	1.58	0.55	594	2.70	1.49	0.55	621	2.55	1.40	0.55	648
27	26	3.03	1.30	0.43	616	2.85	1.23	0.43	643	2.68	1.15	0.43	670
28	18	2.45	2.33	0.95	529	2.25	2.14	0.95	562	2.08	1.97	0.95	583
28	20	2.58	2.14	0.83	551	2.40	1.99	0.83	578	2.23	1.85	0.83	610
28	22	2.73	1.93	0.71	572	2.55	1.81	0.71	605	2.38	1.69	0.71	626
28	24	2.88	1.70	0.59	594	2.70	1.59	0.59	621	2.55	1.50	0.59	648
28	26	3.03	1.42	0.47	616	2.85	1.34	0.47	643	2.68	1.26	0.47	670
29	18	2.45	2.43	0.99	529	2.25	2.23	0.99	562	2.08	2.05	0.99	583
29	20	2.58	2.24	0.87	551	2.40	2.09	0.87	578	2.23	1.94	0.87	610
29	22	2.73	2.04	0.75	572	2.55	1.91	0.75	605	2.38	1.78	0.75	626
29	24	2.88	1.81	0.63	594	2.70	1.70	0.63	621	2.55	1.61	0.63	648
29	26	3.03	1.54	0.51	616	2.85	1.45	0.51	643	2.68	1.36	0.51	670
30	18	2.45	2.45	1.00	529	2.25	2.25	1.00	562	2.08	2.08	1.00	583
30	20	2.58	2.34	0.91	551	2.40	2.18	0.91	578	2.23	2.02	0.91	610
30	22	2.73	2.15	0.79	572	2.55	2.01	0.79	605	2.38	1.88	0.79	626
30	24	2.88	1.93	0.67	594	2.70	1.81	0.67	621	2.55	1.71	0.67	648
30	26	3.03	1.66	0.55	616	2.85	1.57	0.55	643	2.68	1.47	0.55	670
31	18	2.45	2.45	1.00	529	2.25	2.25	1.00	562	2.08	2.08	1.00	583
31	20	2.58	2.45	0.95	551	2.40	2.28	0.95	578	2.23	2.11	0.95	610
31	22	2.73	2.26	0.83	572	2.55	2.12	0.83	605	2.38	1.97	0.83	626
31	24	2.88	2.04	0.71	594	2.70	1.92	0.71	621	2.55	1.81	0.71	648
31	26	3.03	1.78	0.59	616	2.85	1.68	0.59	643	2.68	1.58	0.59	670
32	18	2.45	2.45	1.00	529	2.25	2.25	1.00	562	2.08	2.08	1.00	583
32	20	2.58	2.55	0.99	551	2.40	2.38	0.99	578	2.23	2.20	0.99	610
32	22	2.73	2.37	0.87	572	2.55	2.22	0.87	605	2.38	2.07	0.87	626
32	24	2.88	2.16	0.75	594	2.70	2.03	0.75	621	2.55	1.91	0.75	648
32	26	3.03	1.91	0.63	616	2.85	1.80	0.63	643	2.68	1.69	0.63	670

NOTE Q : Total capacity (kW) SHF : Sensible heat factor DB : Dry-bulb temperature
SHC : Sensible heat capacity (kW) INPUT : Total power input (W) WB : Wet-bulb temperature

PERFORMANCE DATA COOL operation at Rated frequency

MUFZ-KJ35VEHZ

CAPACITY: 3.5 kW SHF: 0.73 INPUT: 940 W

INDOOR DB (°C)	INDOOR WB (°C)	OUTDOOR DB (°C)															
		21				25				27				30			
		Q	SHC	SHF	INPUT	Q	SHC	SHF	INPUT	Q	SHC	SHF	INPUT	Q	SHC	SHF	INPUT
21	18	4.11	2.26	0.55	752	3.94	2.17	0.55	790	3.78	2.08	0.55	827	3.64	2.00	0.55	865
21	20	4.29	1.84	0.43	790	4.11	1.77	0.43	837	3.99	1.72	0.43	855	3.85	1.66	0.43	893
22	18	4.11	2.43	0.59	752	3.94	2.32	0.59	790	3.78	2.23	0.59	827	3.64	2.15	0.59	865
22	20	4.29	2.02	0.47	790	4.11	1.93	0.47	837	3.99	1.88	0.47	855	3.85	1.81	0.47	893
22	22	4.46	1.56	0.35	818	4.31	1.51	0.35	870	4.20	1.47	0.35	893	4.03	1.41	0.35	931
23	18	4.11	2.59	0.63	752	3.94	2.48	0.63	790	3.78	2.38	0.63	827	3.64	2.29	0.63	865
23	20	4.29	2.19	0.51	790	4.11	2.10	0.51	837	3.99	2.03	0.51	855	3.85	1.96	0.51	893
23	22	4.46	1.74	0.39	818	4.31	1.68	0.39	870	4.20	1.64	0.39	893	4.03	1.57	0.39	931
24	18	4.11	2.76	0.67	752	3.94	2.64	0.67	790	3.78	2.53	0.67	827	3.64	2.44	0.67	865
24	20	4.29	2.36	0.55	790	4.11	2.26	0.55	837	3.99	2.19	0.55	855	3.85	2.12	0.55	893
24	22	4.46	1.92	0.43	818	4.31	1.85	0.43	870	4.20	1.81	0.43	893	4.03	1.73	0.43	931
24	24	4.69	1.45	0.31	855	4.52	1.40	0.31	902	4.41	1.37	0.31	931	4.27	1.32	0.31	978
25	18	4.11	2.92	0.71	752	3.94	2.80	0.71	790	3.78	2.68	0.71	827	3.64	2.58	0.71	865
25	20	4.29	2.53	0.59	790	4.11	2.43	0.59	837	3.99	2.35	0.59	855	3.85	2.27	0.59	893
25	22	4.46	2.10	0.47	818	4.31	2.02	0.47	870	4.20	1.97	0.47	893	4.03	1.89	0.47	931
25	24	4.69	1.64	0.35	855	4.52	1.58	0.35	902	4.41	1.54	0.35	931	4.27	1.49	0.35	978
26	18	4.11	3.08	0.75	752	3.94	2.95	0.75	790	3.78	2.84	0.75	827	3.64	2.73	0.75	865
26	20	4.29	2.70	0.63	790	4.11	2.59	0.63	837	3.99	2.51	0.63	855	3.85	2.43	0.63	893
26	22	4.46	2.28	0.51	818	4.31	2.20	0.51	870	4.20	2.14	0.51	893	4.03	2.05	0.51	931
26	24	4.69	1.83	0.39	855	4.52	1.76	0.39	902	4.41	1.72	0.39	931	4.27	1.67	0.39	978
26	26	4.83	1.30	0.27	902	4.69	1.27	0.27	949	4.62	1.25	0.27	978	4.48	1.21	0.27	1006
27	18	4.11	3.25	0.79	752	3.94	3.11	0.79	790	3.78	2.99	0.79	827	3.64	2.88	0.79	865
27	20	4.29	2.87	0.67	790	4.11	2.76	0.67	837	3.99	2.67	0.67	855	3.85	2.58	0.67	893
27	22	4.46	2.45	0.55	818	4.31	2.37	0.55	870	4.20	2.31	0.55	893	4.03	2.21	0.55	931
27	24	4.69	2.02	0.43	855	4.52	1.94	0.43	902	4.41	1.90	0.43	931	4.27	1.84	0.43	978
27	26	4.83	1.50	0.31	902	4.69	1.45	0.31	949	4.62	1.43	0.31	978	4.48	1.39	0.31	1006
28	18	4.11	3.41	0.83	752	3.94	3.27	0.83	790	3.78	3.14	0.83	827	3.64	3.02	0.83	865
28	20	4.29	3.04	0.71	790	4.11	2.92	0.71	837	3.99	2.83	0.71	855	3.85	2.73	0.71	893
28	22	4.46	2.63	0.59	818	4.31	2.54	0.59	870	4.20	2.48	0.59	893	4.03	2.37	0.59	931
28	24	4.69	2.20	0.47	855	4.52	2.12	0.47	902	4.41	2.07	0.47	931	4.27	2.01	0.47	978
28	26	4.83	1.69	0.35	902	4.69	1.64	0.35	949	4.62	1.62	0.35	978	4.48	1.57	0.35	1006
29	18	4.11	3.58	0.87	752	3.94	3.43	0.87	790	3.78	3.29	0.87	827	3.64	3.17	0.87	865
29	20	4.29	3.22	0.75	790	4.11	3.08	0.75	837	3.99	2.99	0.75	855	3.85	2.89	0.75	893
29	22	4.46	2.81	0.63	818	4.31	2.71	0.63	870	4.20	2.65	0.63	893	4.03	2.54	0.63	931
29	24	4.69	2.39	0.51	855	4.52	2.30	0.51	902	4.41	2.25	0.51	931	4.27	2.18	0.51	978
29	26	4.83	1.88	0.39	902	4.69	1.83	0.39	949	4.62	1.80	0.39	978	4.48	1.75	0.39	1006
30	18	4.11	3.74	0.91	752	3.94	3.58	0.91	790	3.78	3.44	0.91	827	3.64	3.31	0.91	865
30	20	4.29	3.39	0.79	790	4.11	3.25	0.79	837	3.99	3.15	0.79	855	3.85	3.04	0.79	893
30	22	4.46	2.99	0.67	818	4.31	2.88	0.67	870	4.20	2.81	0.67	893	4.03	2.70	0.67	931
30	24	4.69	2.58	0.55	855	4.52	2.48	0.55	902	4.41	2.43	0.55	931	4.27	2.35	0.55	978
30	26	4.83	2.08	0.43	902	4.69	2.02	0.43	949	4.62	1.99	0.43	978	4.48	1.93	0.43	1006
31	18	4.11	3.91	0.95	752	3.94	3.74	0.95	790	3.78	3.59	0.95	827	3.64	3.46	0.95	865
31	20	4.29	3.56	0.83	790	4.11	3.41	0.83	837	3.99	3.31	0.83	855	3.85	3.20	0.83	893
31	22	4.46	3.17	0.71	818	4.31	3.06	0.71	870	4.20	2.98	0.71	893	4.03	2.86	0.71	931
31	24	4.69	2.77	0.59	855	4.52	2.66	0.59	902	4.41	2.60	0.59	931	4.27	2.52	0.59	978
31	26	4.83	2.27	0.47	902	4.69	2.20	0.47	949	4.62	2.17	0.47	978	4.48	2.11	0.47	1006
32	18	4.11	4.07	0.99	752	3.94	3.90	0.99	790	3.78	3.74	0.99	827	3.64	3.60	0.99	865
32	20	4.29	3.73	0.87	790	4.11	3.58	0.87	837	3.99	3.47	0.87	855	3.85	3.35	0.87	893
32	22	4.46	3.35	0.75	818	4.31	3.23	0.75	870	4.20	3.15	0.75	893	4.03	3.02	0.75	931
32	24	4.69	2.95	0.63	855	4.52	2.84	0.63	902	4.41	2.78	0.63	931	4.27	2.69	0.63	978
32	26	4.83	2.46	0.51	902	4.69	2.39	0.51	949	4.62	2.36	0.51	978	4.48	2.28	0.51	1006

NOTE Q : Total capacity (kW) SHF : Sensible heat factor DB : Dry-bulb temperature
SHC : Sensible heat capacity (kW) INPUT : Total power input (W) WB : Wet-bulb temperature

PERFORMANCE DATA COOL operation at Rated frequency

MUFZ-KJ35VEHZ

CAPACITY: 3.5 kW SHF: 0.73 INPUT: 940 W

INDOOR DB (°C)	INDOOR WB (°C)	OUTDOOR DB (°C)											
		35				40				46			
		Q	SHC	SHF	INPUT	Q	SHC	SHF	INPUT	Q	SHC	SHF	INPUT
21	18	3.43	1.89	0.55	921	3.15	1.73	0.55	978	2.91	1.60	0.55	1015
21	20	3.61	1.55	0.43	959	3.36	1.44	0.43	1006	3.12	1.34	0.43	1062
22	18	3.43	2.02	0.59	921	3.15	1.86	0.59	978	2.91	1.71	0.59	1015
22	20	3.61	1.69	0.47	959	3.36	1.58	0.47	1006	3.12	1.46	0.47	1062
22	22	3.82	1.34	0.35	996	3.57	1.25	0.35	1053	3.33	1.16	0.35	1090
23	18	3.43	2.16	0.63	921	3.15	1.98	0.63	978	2.91	1.83	0.63	1015
23	20	3.61	1.84	0.51	959	3.36	1.71	0.51	1006	3.12	1.59	0.51	1062
23	22	3.82	1.49	0.39	996	3.57	1.39	0.39	1053	3.33	1.30	0.39	1090
24	18	3.43	2.30	0.67	921	3.15	2.11	0.67	978	2.91	1.95	0.67	1015
24	20	3.61	1.98	0.55	959	3.36	1.85	0.55	1006	3.12	1.71	0.55	1062
24	22	3.82	1.64	0.43	996	3.57	1.54	0.43	1053	3.33	1.43	0.43	1090
24	24	4.03	1.25	0.31	1034	3.78	1.17	0.31	1081	3.57	1.11	0.31	1128
25	18	3.43	2.44	0.71	921	3.15	2.24	0.71	978	2.91	2.06	0.71	1015
25	20	3.61	2.13	0.59	959	3.36	1.98	0.59	1006	3.12	1.84	0.59	1062
25	22	3.82	1.79	0.47	996	3.57	1.68	0.47	1053	3.33	1.56	0.47	1090
25	24	4.03	1.41	0.35	1034	3.78	1.32	0.35	1081	3.57	1.25	0.35	1128
26	18	3.43	2.57	0.75	921	3.15	2.36	0.75	978	2.91	2.18	0.75	1015
26	20	3.61	2.27	0.63	959	3.36	2.12	0.63	1006	3.12	1.96	0.63	1062
26	22	3.82	1.95	0.51	996	3.57	1.82	0.51	1053	3.33	1.70	0.51	1090
26	24	4.03	1.57	0.39	1034	3.78	1.47	0.39	1081	3.57	1.39	0.39	1128
26	26	4.24	1.14	0.27	1072	3.99	1.08	0.27	1119	3.75	1.01	0.27	1166
27	18	3.43	2.71	0.79	921	3.15	2.49	0.79	978	2.91	2.29	0.79	1015
27	20	3.61	2.42	0.67	959	3.36	2.25	0.67	1006	3.12	2.09	0.67	1062
27	22	3.82	2.10	0.55	996	3.57	1.96	0.55	1053	3.33	1.83	0.55	1090
27	24	4.03	1.73	0.43	1034	3.78	1.63	0.43	1081	3.57	1.54	0.43	1128
27	26	4.24	1.31	0.31	1072	3.99	1.24	0.31	1119	3.75	1.16	0.31	1166
28	18	3.43	2.85	0.83	921	3.15	2.61	0.83	978	2.91	2.41	0.83	1015
28	20	3.61	2.56	0.71	959	3.36	2.39	0.71	1006	3.12	2.21	0.71	1062
28	22	3.82	2.25	0.59	996	3.57	2.11	0.59	1053	3.33	1.96	0.59	1090
28	24	4.03	1.89	0.47	1034	3.78	1.78	0.47	1081	3.57	1.68	0.47	1128
28	26	4.24	1.48	0.35	1072	3.99	1.40	0.35	1119	3.75	1.31	0.35	1166
29	18	3.43	2.98	0.87	921	3.15	2.74	0.87	978	2.91	2.53	0.87	1015
29	20	3.61	2.70	0.75	959	3.36	2.52	0.75	1006	3.12	2.34	0.75	1062
29	22	3.82	2.40	0.63	996	3.57	2.25	0.63	1053	3.33	2.09	0.63	1090
29	24	4.03	2.05	0.51	1034	3.78	1.93	0.51	1081	3.57	1.82	0.51	1128
29	26	4.24	1.65	0.39	1072	3.99	1.56	0.39	1119	3.75	1.46	0.39	1166
30	18	3.43	3.12	0.91	921	3.15	2.87	0.91	978	2.91	2.64	0.91	1015
30	20	3.61	2.85	0.79	959	3.36	2.65	0.79	1006	3.12	2.46	0.79	1062
30	22	3.82	2.56	0.67	996	3.57	2.39	0.67	1053	3.33	2.23	0.67	1090
30	24	4.03	2.21	0.55	1034	3.78	2.08	0.55	1081	3.57	1.96	0.55	1128
30	26	4.24	1.82	0.43	1072	3.99	1.72	0.43	1119	3.75	1.61	0.43	1166
31	18	3.43	3.26	0.95	921	3.15	2.99	0.95	978	2.91	2.76	0.95	1015
31	20	3.61	2.99	0.83	959	3.36	2.79	0.83	1006	3.12	2.59	0.83	1062
31	22	3.82	2.71	0.71	996	3.57	2.53	0.71	1053	3.33	2.36	0.71	1090
31	24	4.03	2.37	0.59	1034	3.78	2.23	0.59	1081	3.57	2.11	0.59	1128
31	26	4.24	1.99	0.47	1072	3.99	1.88	0.47	1119	3.75	1.76	0.47	1166
32	18	3.43	3.40	0.99	921	3.15	3.12	0.99	978	2.91	2.88	0.99	1015
32	20	3.61	3.14	0.87	959	3.36	2.92	0.87	1006	3.12	2.71	0.87	1062
32	22	3.82	2.86	0.75	996	3.57	2.68	0.75	1053	3.33	2.49	0.75	1090
32	24	4.03	2.54	0.63	1034	3.78	2.38	0.63	1081	3.57	2.25	0.63	1128
32	26	4.24	2.16	0.51	1072	3.99	2.03	0.51	1119	3.75	1.91	0.51	1166

NOTE Q : Total capacity (kW) SHF : Sensible heat factor DB : Dry-bulb temperature
SHC : Sensible heat capacity (kW) INPUT : Total power input (W) WB : Wet-bulb temperature

PERFORMANCE DATA COOL operation at Rated frequency

MUFZ-KJ50VEHZ

CAPACITY: 5.0 kW SHF: 0.71 INPUT: 1410 W

INDOOR DB (°C)	INDOOR WB (°C)	OUTDOOR DB (°C)															
		21				25				27				30			
		Q	SHC	SHF	INPUT	Q	SHC	SHF	INPUT	Q	SHC	SHF	INPUT	Q	SHC	SHF	INPUT
21	18	5.88	3.11	0.53	1128	5.63	2.98	0.53	1184	5.40	2.86	0.53	1241	5.20	2.76	0.53	1297
21	20	6.13	2.51	0.41	1184	5.88	2.41	0.41	1255	5.70	2.34	0.41	1283	5.50	2.26	0.41	1340
22	18	5.88	3.35	0.57	1128	5.63	3.21	0.57	1184	5.40	3.08	0.57	1241	5.20	2.96	0.57	1297
22	20	6.13	2.76	0.45	1184	5.88	2.64	0.45	1255	5.70	2.57	0.45	1283	5.50	2.48	0.45	1340
22	22	6.38	2.10	0.33	1227	6.15	2.03	0.33	1304	6.00	1.98	0.33	1340	5.75	1.90	0.33	1396
23	18	5.88	3.58	0.61	1128	5.63	3.43	0.61	1184	5.40	3.29	0.61	1241	5.20	3.17	0.61	1297
23	20	6.13	3.00	0.49	1184	5.88	2.88	0.49	1255	5.70	2.79	0.49	1283	5.50	2.70	0.49	1340
23	22	6.38	2.36	0.37	1227	6.15	2.28	0.37	1304	6.00	2.22	0.37	1340	5.75	2.13	0.37	1396
24	18	5.88	3.82	0.65	1128	5.63	3.66	0.65	1184	5.40	3.51	0.65	1241	5.20	3.38	0.65	1297
24	20	6.13	3.25	0.53	1184	5.88	3.11	0.53	1255	5.70	3.02	0.53	1283	5.50	2.92	0.53	1340
24	22	6.38	2.61	0.41	1227	6.15	2.52	0.41	1304	6.00	2.46	0.41	1340	5.75	2.36	0.41	1396
24	24	6.70	1.94	0.29	1283	6.45	1.87	0.29	1354	6.30	1.83	0.29	1396	6.10	1.77	0.29	1466
25	18	5.88	4.05	0.69	1128	5.63	3.88	0.69	1184	5.40	3.73	0.69	1241	5.20	3.59	0.69	1297
25	20	6.13	3.49	0.57	1184	5.88	3.35	0.57	1255	5.70	3.25	0.57	1283	5.50	3.14	0.57	1340
25	22	6.38	2.87	0.45	1227	6.15	2.77	0.45	1304	6.00	2.70	0.45	1340	5.75	2.59	0.45	1396
25	24	6.70	2.21	0.33	1283	6.45	2.13	0.33	1354	6.30	2.08	0.33	1396	6.10	2.01	0.33	1466
26	18	5.88	4.29	0.73	1128	5.63	4.11	0.73	1184	5.40	3.94	0.73	1241	5.20	3.80	0.73	1297
26	20	6.13	3.74	0.61	1184	5.88	3.58	0.61	1255	5.70	3.48	0.61	1283	5.50	3.36	0.61	1340
26	22	6.38	3.12	0.49	1227	6.15	3.01	0.49	1304	6.00	2.94	0.49	1340	5.75	2.82	0.49	1396
26	24	6.70	2.48	0.37	1283	6.45	2.39	0.37	1354	6.30	2.33	0.37	1396	6.10	2.26	0.37	1466
26	26	6.90	1.73	0.25	1354	6.70	1.68	0.25	1424	6.60	1.65	0.25	1466	6.40	1.60	0.25	1509
27	18	5.88	4.52	0.77	1128	5.63	4.33	0.77	1184	5.40	4.16	0.77	1241	5.20	4.00	0.77	1297
27	20	6.13	3.98	0.65	1184	5.88	3.82	0.65	1255	5.70	3.71	0.65	1283	5.50	3.58	0.65	1340
27	22	6.38	3.38	0.53	1227	6.15	3.26	0.53	1304	6.00	3.18	0.53	1340	5.75	3.05	0.53	1396
27	24	6.70	2.75	0.41	1283	6.45	2.64	0.41	1354	6.30	2.58	0.41	1396	6.10	2.50	0.41	1466
27	26	6.90	2.00	0.29	1354	6.70	1.94	0.29	1424	6.60	1.91	0.29	1466	6.40	1.86	0.29	1509
28	18	5.88	4.76	0.81	1128	5.63	4.56	0.81	1184	5.40	4.37	0.81	1241	5.20	4.21	0.81	1297
28	20	6.13	4.23	0.69	1184	5.88	4.05	0.69	1255	5.70	3.93	0.69	1283	5.50	3.80	0.69	1340
28	22	6.38	3.63	0.57	1227	6.15	3.51	0.57	1304	6.00	3.42	0.57	1340	5.75	3.28	0.57	1396
28	24	6.70	3.02	0.45	1283	6.45	2.90	0.45	1354	6.30	2.84	0.45	1396	6.10	2.75	0.45	1466
28	26	6.90	2.28	0.33	1354	6.70	2.21	0.33	1424	6.60	2.18	0.33	1466	6.40	2.11	0.33	1509
29	18	5.88	4.99	0.85	1128	5.63	4.78	0.85	1184	5.40	4.59	0.85	1241	5.20	4.42	0.85	1297
29	20	6.13	4.47	0.73	1184	5.88	4.29	0.73	1255	5.70	4.16	0.73	1283	5.50	4.02	0.73	1340
29	22	6.38	3.89	0.61	1227	6.15	3.75	0.61	1304	6.00	3.66	0.61	1340	5.75	3.51	0.61	1396
29	24	6.70	3.28	0.49	1283	6.45	3.16	0.49	1354	6.30	3.09	0.49	1396	6.10	2.99	0.49	1466
29	26	6.90	2.55	0.37	1354	6.70	2.48	0.37	1424	6.60	2.44	0.37	1466	6.40	2.37	0.37	1509
30	18	5.88	5.23	0.89	1128	5.63	5.01	0.89	1184	5.40	4.81	0.89	1241	5.20	4.63	0.89	1297
30	20	6.13	4.72	0.77	1184	5.88	4.52	0.77	1255	5.70	4.39	0.77	1283	5.50	4.24	0.77	1340
30	22	6.38	4.14	0.65	1227	6.15	4.00	0.65	1304	6.00	3.90	0.65	1340	5.75	3.74	0.65	1396
30	24	6.70	3.55	0.53	1283	6.45	3.42	0.53	1354	6.30	3.34	0.53	1396	6.10	3.23	0.53	1466
30	26	6.90	2.83	0.41	1354	6.70	2.75	0.41	1424	6.60	2.71	0.41	1466	6.40	2.62	0.41	1509
31	18	5.88	5.46	0.93	1128	5.63	5.23	0.93	1184	5.40	5.02	0.93	1241	5.20	4.84	0.93	1297
31	20	6.13	4.96	0.81	1184	5.88	4.76	0.81	1255	5.70	4.62	0.81	1283	5.50	4.46	0.81	1340
31	22	6.38	4.40	0.69	1227	6.15	4.24	0.69	1304	6.00	4.14	0.69	1340	5.75	3.97	0.69	1396
31	24	6.70	3.82	0.57	1283	6.45	3.68	0.57	1354	6.30	3.59	0.57	1396	6.10	3.48	0.57	1466
31	26	6.90	3.11	0.45	1354	6.70	3.02	0.45	1424	6.60	2.97	0.45	1466	6.40	2.88	0.45	1509
32	18	5.88	5.70	0.97	1128	5.63	5.46	0.97	1184	5.40	5.24	0.97	1241	5.20	5.04	0.97	1297
32	20	6.13	5.21	0.85	1184	5.88	4.99	0.85	1255	5.70	4.84	0.85	1283	5.50	4.68	0.85	1340
32	22	6.38	4.65	0.73	1227	6.15	4.49	0.73	1304	6.00	4.38	0.73	1340	5.75	4.20	0.73	1396
32	24	6.70	4.09	0.61	1283	6.45	3.93	0.61	1354	6.30	3.84	0.61	1396	6.10	3.72	0.61	1466
32	26	6.90	3.38	0.49	1354	6.70	3.28	0.49	1424	6.60	3.23	0.49	1466	6.40	3.14	0.49	1509

NOTE Q : Total capacity (kW) SHF : Sensible heat factor DB : Dry-bulb temperature
SHC : Sensible heat capacity (kW) INPUT : Total power input (W) WB : Wet-bulb temperature

PERFORMANCE DATA COOL operation at Rated frequency

MUFZ-KJ50VEHZ

CAPACITY: 5.0 kW SHF: 0.71 INPUT: 1410 W

INDOOR DB (°C)	INDOOR WB (°C)	OUTDOOR DB (°C)											
		35				40				46			
		Q	SHC	SHF	INPUT	Q	SHC	SHF	INPUT	Q	SHC	SHF	INPUT
21	18	4.90	2.60	0.53	1382	4.50	2.39	0.53	1466	4.15	2.20	0.53	1523
21	20	5.15	2.11	0.41	1438	4.80	1.97	0.41	1509	4.45	1.82	0.41	1593
22	18	4.90	2.79	0.57	1382	4.50	2.57	0.57	1466	4.15	2.37	0.57	1523
22	20	5.15	2.32	0.45	1438	4.80	2.16	0.45	1509	4.45	2.00	0.45	1593
22	22	5.45	1.80	0.33	1495	5.10	1.68	0.33	1579	4.75	1.57	0.33	1636
23	18	4.90	2.99	0.61	1382	4.50	2.75	0.61	1466	4.15	2.53	0.61	1523
23	20	5.15	2.52	0.49	1438	4.80	2.35	0.49	1509	4.45	2.18	0.49	1593
23	22	5.45	2.02	0.37	1495	5.10	1.89	0.37	1579	4.75	1.76	0.37	1636
24	18	4.90	3.19	0.65	1382	4.50	2.93	0.65	1466	4.15	2.70	0.65	1523
24	20	5.15	2.73	0.53	1438	4.80	2.54	0.53	1509	4.45	2.36	0.53	1593
24	22	5.45	2.23	0.41	1495	5.10	2.09	0.41	1579	4.75	1.95	0.41	1636
24	24	5.75	1.67	0.29	1551	5.40	1.57	0.29	1621	5.10	1.48	0.29	1692
25	18	4.90	3.38	0.69	1382	4.50	3.11	0.69	1466	4.15	2.86	0.69	1523
25	20	5.15	2.94	0.57	1438	4.80	2.74	0.57	1509	4.45	2.54	0.57	1593
25	22	5.45	2.45	0.45	1495	5.10	2.30	0.45	1579	4.75	2.14	0.45	1636
25	24	5.75	1.90	0.33	1551	5.40	1.78	0.33	1621	5.10	1.68	0.33	1692
26	18	4.90	3.58	0.73	1382	4.50	3.29	0.73	1466	4.15	3.03	0.73	1523
26	20	5.15	3.14	0.61	1438	4.80	2.93	0.61	1509	4.45	2.71	0.61	1593
26	22	5.45	2.67	0.49	1495	5.10	2.50	0.49	1579	4.75	2.33	0.49	1636
26	24	5.75	2.13	0.37	1551	5.40	2.00	0.37	1621	5.10	1.89	0.37	1692
26	26	6.05	1.51	0.25	1607	5.70	1.43	0.25	1678	5.35	1.34	0.25	1748
27	18	4.90	3.77	0.77	1382	4.50	3.47	0.77	1466	4.15	3.20	0.77	1523
27	20	5.15	3.35	0.65	1438	4.80	3.12	0.65	1509	4.45	2.89	0.65	1593
27	22	5.45	2.89	0.53	1495	5.10	2.70	0.53	1579	4.75	2.52	0.53	1636
27	24	5.75	2.36	0.41	1551	5.40	2.21	0.41	1621	5.10	2.09	0.41	1692
27	26	6.05	1.75	0.29	1607	5.70	1.65	0.29	1678	5.35	1.55	0.29	1748
28	18	4.90	3.97	0.81	1382	4.50	3.65	0.81	1466	4.15	3.36	0.81	1523
28	20	5.15	3.55	0.69	1438	4.80	3.31	0.69	1509	4.45	3.07	0.69	1593
28	22	5.45	3.11	0.57	1495	5.10	2.91	0.57	1579	4.75	2.71	0.57	1636
28	24	5.75	2.59	0.45	1551	5.40	2.43	0.45	1621	5.10	2.30	0.45	1692
28	26	6.05	2.00	0.33	1607	5.70	1.88	0.33	1678	5.35	1.77	0.33	1748
29	18	4.90	4.17	0.85	1382	4.50	3.83	0.85	1466	4.15	3.53	0.85	1523
29	20	5.15	3.76	0.73	1438	4.80	3.50	0.73	1509	4.45	3.25	0.73	1593
29	22	5.45	3.32	0.61	1495	5.10	3.11	0.61	1579	4.75	2.90	0.61	1636
29	24	5.75	2.82	0.49	1551	5.40	2.65	0.49	1621	5.10	2.50	0.49	1692
29	26	6.05	2.24	0.37	1607	5.70	2.11	0.37	1678	5.35	1.98	0.37	1748
30	18	4.90	4.36	0.89	1382	4.50	4.01	0.89	1466	4.15	3.69	0.89	1523
30	20	5.15	3.97	0.77	1438	4.80	3.70	0.77	1509	4.45	3.43	0.77	1593
30	22	5.45	3.54	0.65	1495	5.10	3.32	0.65	1579	4.75	3.09	0.65	1636
30	24	5.75	3.05	0.53	1551	5.40	2.86	0.53	1621	5.10	2.70	0.53	1692
30	26	6.05	2.48	0.41	1607	5.70	2.34	0.41	1678	5.35	2.19	0.41	1748
31	18	4.90	4.56	0.93	1382	4.50	4.19	0.93	1466	4.15	3.86	0.93	1523
31	20	5.15	4.17	0.81	1438	4.80	3.89	0.81	1509	4.45	3.60	0.81	1593
31	22	5.45	3.76	0.69	1495	5.10	3.52	0.69	1579	4.75	3.28	0.69	1636
31	24	5.75	3.28	0.57	1551	5.40	3.08	0.57	1621	5.10	2.91	0.57	1692
31	26	6.05	2.72	0.45	1607	5.70	2.57	0.45	1678	5.35	2.41	0.45	1748
32	18	4.90	4.75	0.97	1382	4.50	4.37	0.97	1466	4.15	4.03	0.97	1523
32	20	5.15	4.38	0.85	1438	4.80	4.08	0.85	1509	4.45	3.78	0.85	1593
32	22	5.45	3.98	0.73	1495	5.10	3.72	0.73	1579	4.75	3.47	0.73	1636
32	24	5.75	3.51	0.61	1551	5.40	3.29	0.61	1621	5.10	3.11	0.61	1692
32	26	6.05	2.96	0.49	1607	5.70	2.79	0.49	1678	5.35	2.62	0.49	1748

NOTE Q : Total capacity (kW) SHF : Sensible heat factor DB : Dry-bulb temperature
SHC : Sensible heat capacity (kW) INPUT : Total power input (W) WB : Wet-bulb temperature

PERFORMANCE DATA HEAT operation at Rated frequency

MUFZ-KJ25VEHZ

CAPACITY: 3.4 kW INPUT: 770 W

INDOOR DB (°C)	OUTDOOR WB (°C)													
	-10		-5		0		5		10		15		20	
	Q	INPUT	Q	INPUT	Q	INPUT	Q	INPUT	Q	INPUT	Q	INPUT	Q	INPUT
15	2.14	501	2.58	601	3.03	678	3.47	732	3.91	778	4.32	801	4.76	816
21	2.04	539	2.45	639	2.89	708	3.30	762	3.74	801	4.15	824	4.57	855
26	1.84	578	2.28	678	2.69	747	3.13	801	3.57	839	3.98	862	4.42	886

MUFZ-KJ35VEHZ

CAPACITY: 4.3 kW INPUT: 1100 W

INDOOR DB (°C)	OUTDOOR WB (°C)													
	-10		-5		0		5		10		15		20	
	Q	INPUT	Q	INPUT	Q	INPUT	Q	INPUT	Q	INPUT	Q	INPUT	Q	INPUT
15	2.71	715	3.27	858	3.83	968	4.39	1045	4.95	1111	5.46	1144	6.02	1166
21	2.58	770	3.10	913	3.66	1012	4.17	1089	4.73	1144	5.25	1177	5.78	1221
26	2.32	825	2.88	968	3.40	1067	3.96	1144	4.52	1199	5.03	1232	5.59	1265

NOTE: Q: Total capacity (kW) INPUT : Total power input (W) DB: Dry-bulb temperature WB: Wet-bulb temperature

MUFZ-KJ50VEHZ

CAPACITY: 6.0 kW INPUT: 1610 W

INDOOR DB (°C)	OUTDOOR WB (°C)													
	-10		-5		0		5		10		15		20	
	Q	INPUT	Q	INPUT	Q	INPUT	Q	INPUT	Q	INPUT	Q	INPUT	Q	INPUT
15	3.78	1047	4.56	1256	5.34	1417	6.12	1530	6.90	1626	7.62	1674	8.40	1707
21	3.60	1127	4.32	1336	5.10	1481	5.82	1594	6.60	1674	7.32	1723	8.07	1787
26	3.24	1208	4.02	1417	4.74	1562	5.52	1674	6.30	1755	7.02	1803	7.80	1852

NOTE: Q: Total capacity (kW) INPUT : Total power input (W) DB: Dry-bulb temperature WB: Wet-bulb temperature

9 ACTUATOR CONTROL

MUFZ-KJ25VEHZ
MUFZ-KJ35VEHZ
MUFZ-KJ50VEHZ

9-1. OUTDOOR FAN MOTOR CONTROL

The fan motor turns ON/OFF, interlocking with the compressor.
[ON] The fan motor turns ON 5 seconds before the compressor starts up.
[OFF] The fan motor turns OFF 15 seconds after the compressor has stopped running.

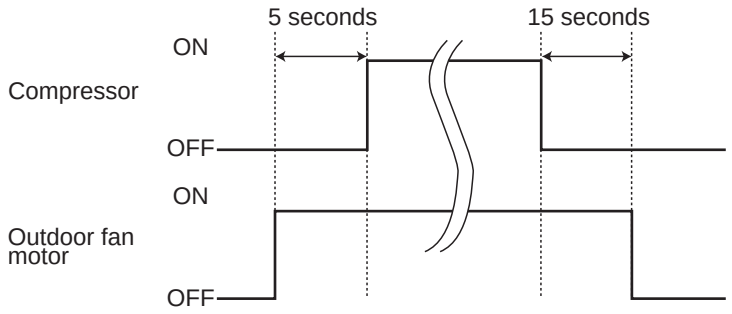

9-2. R.V. COIL CONTROL

Heating · · · · · · · · · · · · · · · · · ON
Cooling · · · · · · · · · · · · · · · · · OFF
Dry · · · · · · · · · · · · · · · · · · · OFF

NOTE: The 4-way valve reverses for 5 seconds right before start-up of the compressor.

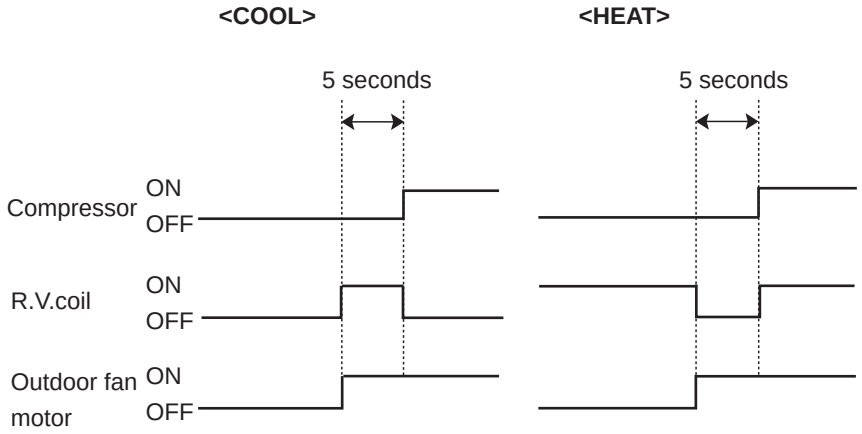

9-3. RELATION BETWEEN MAIN SENSOR AND ACTUATOR

Sensor	Purpose	Actuator					
		Compressor	LEV	Outdoor fan motor	R.V.coil	Indoor fan motor	Defrost heater
Discharge temperature thermistor	Protection	○	○				
Indoor coil temperature thermistor	Cooling: Coil frost prevention	○					
	Heating: High pressure protection	○	○				
Defrost thermistor	Heating: Defrosting	○	○	○	○	○	
Fin temperature thermistor	Protection	○		○			
Ambient temperature thermistor	Cooling: Low ambient temperature operation	○	○	○			
	Heating: Defrosting (Heater)						○
Outdoor heat exchanger temperature thermistor	Cooling: Low ambient temperature operation	○	○	○			
	Cooling: High pressure protection	○	○	○			

10 SERVICE FUNCTIONS

MUFZ-KJ25VEHZ
MUFZ-KJ35VEHZ
MUFZ-KJ50VEHZ

10-1. CHANGE IN DEFROST SETTING

Changing defrost finish temperature

<JS> To change the defrost finish temperature, cut/solder the JS wire of the outdoor inverter P.C. board.
(Refer to 11-6-1.)

Jumper wire		Defrost finish temperature (°C)
JS	Soldered (Initial setting)	8
	None (Cut)	15

10-2. PRE-HEAT CONTROL SETTING

PRE-HEAT CONTROL

MUFZ-KJ25/35

When moisture gets into the refrigerant cycle, it may interfere the start-up of the compressor at low outside temperature. The pre-heat control prevents this interference. The pre-heat control turns ON when the discharge temperature thermistor is 20°C or below. When the pre-heat control turns ON, the compressor is energized. (About 50 W)

MUFZ-KJ50

Prolonged low load operation, in which the thermostat is OFF for a long time, at low outside temperature (0°C or less) may cause the following troubles. To prevent those troubles, activate the pre-heat control.

1) If moisture gets into the refrigerant cycle and freezes, it may interfer the start-up of the compressor.
2) If liquid refrigerant collects in the compressor, a failure in the compressor may occur.

The pre-heat control turns ON when the compressor temperature is 20°C or below. When the pre-heat control turns ON, the compressor is energized. (About 70 W)

Pre-heat control setting

<JK>
ON: To activate the pre-heat control, cut JK wire of the inverter P.C. board.
OFF: To deactivate the pre-heat control, solder JK wire of the inverter P.C. board.
(Refer to 11-6.1)

NOTE: When the inverter P.C. board is replaced, check the jumper wires, and cut/solder them if necessary.

11 TROUBLESHOOTING

MUFZ-KJ25VEHZ
MUFZ-KJ35VEHZ
MUFZ-KJ50VEHZ

11-1. CAUTIONS ON TROUBLESHOOTING

1. Before troubleshooting, check the following

1) Check the power supply voltage.
2) Check the indoor/outdoor connecting wire for miswiring.

2. Take care of the following during servicing

1) Before servicing the air conditioner, be sure to turn OFF the main unit first with the remote controller, and then after confirming the horizontal vane is closed, turn OFF the breaker and/or disconnect the power plug.
2) Be sure to turn OFF the power supply before removing the front panel, the cabinet, the top panel, and the electronic control P.C. board.
3) When removing the electrical parts, be careful of the residual voltage of smoothing capacitor.
4) When removing the electronic control P.C. board, hold the edge of the board with care NOT to apply stress on the components.
5) When connecting or disconnecting the connectors, hold the connector housing. DO NOT pull the lead wires.

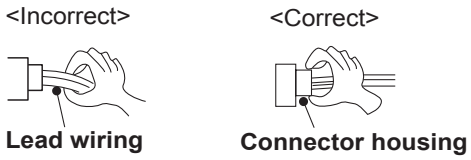

3. Troubleshooting procedure

1) Check if the OPERATION INDICATOR lamp on the indoor unit is flashing on and off to indicate an abnormality.
   To make sure, check how many times the OPERATION INDICATOR lamp is flashing on and off before starting service work.
2) Before servicing, check that the connector and terminal are connected properly.
3) When the electronic control P.C. board seems to be defective, check the copper foil pattern for disconnection and the components for bursting and discoloration.
4) Refer to 11-2 and 11-3.

11-2. FAILURE MODE RECALL FUNCTION

Outline of the function

This air conditioner can memorize the abnormal condition which has occurred once.

Even though LED indication listed on the troubleshooting check table (11-3.) disappears, the memorized failure details can be recalled.

1. Flow chart of failure mode recall function for the indoor/outdoor unit

MFZ-KJ25VE
MFZ-KJ35VE
MFZ-KJ50VE

MFZ-KJ25VE2
MFZ-KJ35VE2
MFZ-KJ50VE2

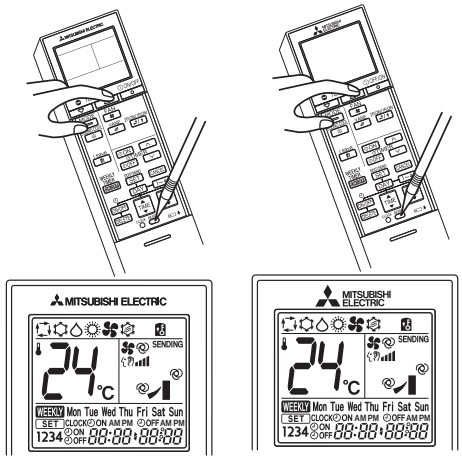

Operational procedure

The cause of abnormality cannot be found because the abnormality does not recur.

Setting up the failure mode recall function

Turn ON the power supply.
<Preparation of the remote controller>
① While pressing OPERATION SELECT (MODE) button and TEMP ⊕ button on the remote controller at the same time, press RESET button.
② First, release RESET button.
Hold down the other 2 buttons for another 3 seconds. Make sure that the indicators on the LCD screen shown in the right figure are all displayed. Then release the buttons.

Press OPERATE/STOP (ON/OFF)(**MFZ-KJ25/35/50VE**)/ STOP/OPERATE (OFF/ON) (**MFZ-KJ25/35/50VE2**) button of the remote controller (the set temperature is displayed) with the remote controller headed towards the indoor unit. ※1

※1. Regardless of normal or abnormal condition, a short beep is emitted once the signal is received.

Does the left lamp of the OPERATION INDICATOR lamp on the indoor unit blink at the interval of 0.5 seconds?
Blinks: Either indoor or outdoor unit is abnormal. Beep is emitted at the same timing as the blinking of the left lamp of the OPERATION INDICATOR lamp. ※2

No (OFF) →

Indoor unit is normal.
But the outdoor unit might be abnormal because there are some abnormalities that cannot be recalled with this way.
Check if the outdoor unit is abnormal according to the detailed outdoor unit failure mode recall function. (Refer to 11-2.2)

NOTE: It takes up to 1 minute to indicate the outdoor unit abnormality. Even if the OPERATION INDICATOR lamp is not lighting, keep checking at least 1 minute or longer.

Yes (Blinks)

Judgment of indoor/outdoor abnormality

Before blinking, does the left lamp of the OPERATION INDICATOR lamp stay ON for 3 seconds?
When it stays ON for 3 seconds (without beep):
The outdoor unit is abnormal.

Yes →

The outdoor unit is abnormal.
Check the blinking pattern, and identify the abnormal point by referring to the outdoor unit failure mode table. (Refer to 11-2.3)
Make sure to check at least 2 consecutive blinking cycles. ※3

No

The indoor unit is abnormal.
Check the blinking pattern, and identify the abnormal point by referring to the indoor unit failure mode table. (Refer to indoor unit service manual.)
Make sure to check at least 2 consecutive blinking cycles. ※2

Releasing the failure mode recall function

Release the failure mode recall function by the following procedures.
Turn OFF the power supply and turn it ON again.
Press RESET button of the remote controller.

Repair the failure parts.

Deleting the memorized abnormal condition

① After repairing the unit, recall the failure mode again according to "Setting up the failure mode recall function" mentioned above.
② Press OPERATE/STOP (ON/OFF)(**MFZ-KJ25/35/50VE**)/ STOP/OPERATE (OFF/ON)(**MFZ-KJ25/35/50VE2**) button of the remote controller (the set temperature is displayed) with the remote controller headed towards the indoor unit.
③ Press EMERGENCY OPERATION switch so that the memorized abnormal condition is deleted. ※4
④ Release the failure mode recall function according to "Releasing the failure mode recall function" mentioned above.

※4 The information regarding whether the connected outdoor unit is a low-standby-power model or a non-low-standby-power model will also be initialized.
(Default= compatible with a low-standby-power model)

NOTE: 1. Make sure to release the failure mode recall function after it is set up, otherwise the unit cannot operate properly.
2. If the abnormal condition is not deleted from the memory, the last abnormal condition is kept memorized.

※2. Blinking pattern when the indoor unit is abnormal:

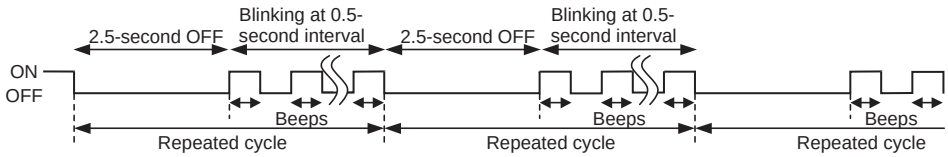

※3.Blinking pattern when the outdoor unit is abnormal:

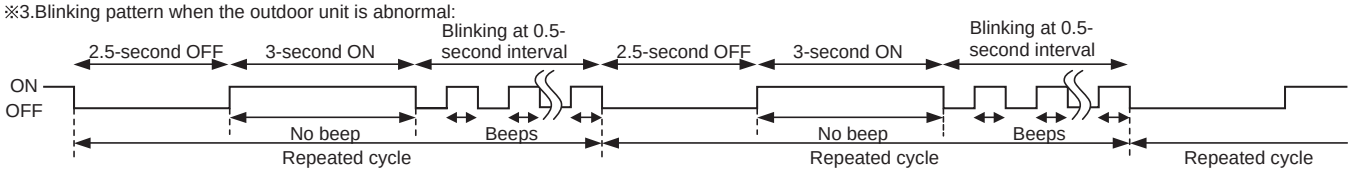

2. Flow chart of the detailed outdoor unit failure mode recall function

Operational procedure

The outdoor unit might be abnormal.
Check if the outdoor unit is abnormal according to the following procedures.

↓

Make sure that the remote controller is set to the failure mode recall function.

↓

With the remote controller headed towards the indoor unit, press TEMP ⊕ button to adjust the set temperature to 25°C. ※1

※1. Regardless of normal or abnormal condition, 2 short beeps are emitted as the signal is received.

NOTE: It takes up to 1 minute to indicate the outdoor unit abnormality. Even if the OPERATION INDICATOR lamp is not lighting, keep checking at least 1 minute or longer.

↓

Does the left lamp of the OPERATION INDICATOR lamp on the indoor unit blink at the interval of 0.5 seconds?
Blinks: The outdoor unit is abnormal. Beep is emitted at the same timing as the blinking of the left lamp of the OPERATION INDICATOR lamp. ※2

No (OFF) → The outdoor unit is normal. → Release the failure mode recall function according to the left mentioned procedure.

Yes (Blinks) ↓

The outdoor unit is abnormal.
Check the blinking pattern, and identify the abnormal point by referring to the outdoor unit failure mode table (11-2.3.).
Make sure to check at least 2 consecutive blinking cycles. ※2

↓

Releasing the failure mode recall function

Release the failure mode recall function by the following procedures.
Turn OFF the power supply and turn it ON again.
Press RESET button of the remote controller.

↓

Repair the failure parts.

↓

Deleting the memorized abnormal condition

① After repairing the unit, recall the failure mode again according to "Setting up the failure mode recall function" (11-2.1.).
② Press OPERATE/STOP (ON/OFF)(**MFZ-KJ25/35/50VE**)/ STOP/OPERATE (OFF/ON)(**MFZ-KJ25/35/50VE2**) button of the remote controller (the set temperature is displayed) with the remote controller headed towards the indoor unit.
③ Press EMERGENCY OPERATION switch so that the memorized abnormal condition is deleted. ※3
④ Release the failure mode recall function according to "Releasing the failure mode recall function" mentioned above.

※3 The information regarding whether the connected outdoor unit is a low-standby-power model or a non-low-standby-power model will also be initialized.
(Default= compatible with a low-standby-power model)

NOTE: 1. Make sure to release the failure mode recall function after it is set up, otherwise the unit cannot operate properly.
2. If the abnormal condition is not deleted from the memory, the last abnormal condition is kept memorized.

※2.Blinking pattern when outdoor unit is abnormal:

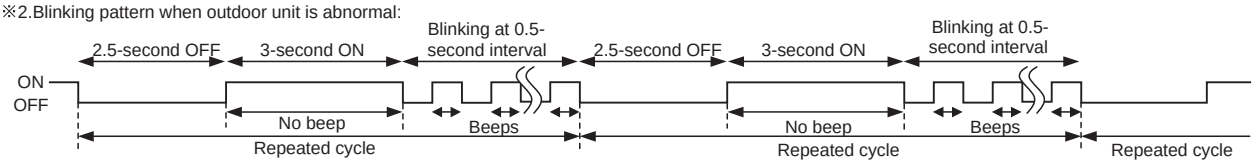

3. Outdoor unit failure mode table

Left lamp of the OPERATION INDICATOR lamp (Indoor unit)	Abnormal point (Failure mode/protection)	LED indication (Outdoor P.C. board)	Condition	Remedy	Indoor/outdoor unit failure mode recall function	Outdoor unit failure mode recall function
OFF	None (Normal)	—	—	—	—	—
1-time flash 2.5 seconds OFF	Indoor/outdoor communication, receiving error	—	Any signals from the inverter P.C. board cannot be received normally for 3 minutes.	•Refer to 11-5. Ⓜ How to check miswiring and serial signal error.	○	○
	Indoor/outdoor communication, receiving error	—	Although the inverter P.C. board sends signal "0", signal "1" has been received 30 consecutive times.	•Refer to 11-5. Ⓜ How to check miswiring and serial signal error.		
2-time flash 2.5 seconds OFF	Outdoor power system	—	Overcurrent protection cut-out operates 3 consecutive times within 1 minute after the compressor gets started.	•Reconnect the connectors. •Refer to 11-5. Ⓐ"How to check inverter/ compressor". •Check the stop valve.	○	○
3-time flash 2.5 seconds OFF	Discharge temperature thermistor	1-time flash every 2.5 seconds	Thermistor shorts or opens during compressor running.	•Refer to 11-5.Ⓖ "Check of outdoor thermistors". Defective the outdoor thermistors can be identified by checking the blinking pattern of LED.	○	○
	Defrost thermistor					
	Fin temperature thermistor	3-time flash 2.5 seconds OFF				
	P.C. board temperature thermistor	4-time flash 2.5 seconds OFF				
	Ambient temperature thermistor	2-time flash 2.5 seconds OFF				
	Outdoor heat exchanger temperature thermistor	—				
4-time flash 2.5 seconds OFF	Overcurrent	11-time flash 2.5 seconds OFF	Large current flows into power module (IC700) (**KJ25/35**)/ IGBT module (IC700) (**KJ50**).	•Reconnect the compressor connector. •Refer to 11-5.Ⓐ"How to check inverter/ compressor". •Check the stop valve.	—	○
	Compressor synchronous abnormality (Compressor start-up failure protection)	12-time flash 2.5 seconds OFF	Waveform of compressor current is distorted.	•Reconnect the compressor connector. •Refer to 11-5.Ⓐ"How to check inverter/ compressor".	—	○
5-time flash 2.5 seconds OFF	Discharge temperature	—	Temperature of discharge temperature thermistor exceeds 116°C, compressor stops. Compressor can restart if discharge temperature thermistor reads 100°C or less 3 minutes later.	•Check the refrigerant circuit and the refrigerant amount. •Refer to 11-5.Ⓚ"Check of LEV".	—	○
6-time flash 2.5 seconds OFF	High pressure	—	Temperature indoor coil thermistor exceeds 70°C in HEAT mode. Temperature defrost thermistor exceeds 70°C in COOL mode.	•Check the refrigerant circuit and the refrigerant amount. •Check the stop valve.	—	○
7-time flash 2.5 seconds OFF	Fin temperature/ P.C. board temperature	7-time flash 2.5 seconds OFF	Temperature of the fin temperature thermistor on the inverter P.C. board exceeds 75 ~ 86°C (**KJ25/35**)/75 ~ 80°C (**KJ50**), or temperature of P.C. board temperature thermistor on the inverter P.C. board exceeds 72 ~ 85°C (**KJ25/35**)/70 ~ 75°C (**KJ50**).	•Check around the outdoor unit. •Check the outdoor unit air passage. •Refer to 11-5.Ⓘ"Check of outdoor fan motor".	—	○
8-time flash 2.5 seconds OFF	Outdoor fan motor	—	Outdoor fan has stopped 3 times in a row within 30 seconds after outdoor fan start-up.	•Refer to 11-5.Ⓘ"Check of outdoor fan motor". Refer to 11-5.Ⓛ"Check of inverter P.C. board".	—	○
9-time flash 2.5 seconds OFF	Nonvolatile memory data	5-time flash 2.5 seconds OFF	Nonvolatile memory data cannot be read properly.	•Replace the inverter P.C. board.	○	○
	Power module (IC700) (**KJ25/35**) IGBT module (IC700) (**KJ50**)	6-time flash 2.5 seconds OFF	The interface short circuit occurs in the output of the power module (IC700)(**KJ25/35**)/IGBT module (IC700) (**KJ50**). The compressor winding shorts circuit.	•Refer to 11-5. Ⓐ"How to check inverter/ compressor".		
10-time flash 2.5 seconds OFF	Discharge temperature	—	Temperature of discharge temperature thermistor has been 50°C or less for 20 minutes.	•Refer to 11-5.Ⓚ"Check of LEV". •Check the refrigerant circuit and the refrigerant amount.	—	○

NOTE: Blinking patterns of this mode differ from the ones of TROUBLESHOOTING CHECK TABLE (11-3.).

Left lamp of the OPERATION INDICATOR lamp (Indoor unit)	Abnormal point (Failure mode/protection)	LED indication (Outdoor P.C. board)	Condition	Remedy	Indoor/outdoor unit failure mode recall function	Outdoor unit failure mode recall function
11-time flash 2.5 seconds OFF	Bus-bar voltage (DC)	8-time flash 2.5 seconds OFF	Bus-bar voltage of inverter cannot be detected normally.	•Refer to 11-5.Ⓐ"How to check inverter/ compressor".	—	○
	Each phase current of compressor	9-time flash 2.5 seconds OFF	Each phase current of compressor cannot be detected normally.			
14-time flash or more 2.5 seconds OFF	Stop valve (Closed valve)	14-time flash 2.5 seconds OFF	Closed valve is detected by compressor current.	•Check the stop valve.	○	○
	4-way valve/ Pipe temperature	16-time flash 2.5 seconds OFF	The 4-way valve does not work properly. The indoor coil thermistor detects an abnormal temperature.	•Check the 4-way valve. •Replace the inverter P.C. board.		
	Outdoor refrigerant system abnormality	17-time flash 2.5 seconds OFF	A closed valve and air trapped in the refrigerant circuit are detected based on the temperature sensed by the indoor and outdoor thermistors and the current of the compressor.	•Check for a gas leak in a connecting piping etc. •Check the stop valve. •Refer to 11-5. Ⓞ "Check of outdoor refrigerant circuit".	○	○

NOTE: Blinking patterns of this mode differ from the ones of TROUBLESHOOTING CHECK TABLE (11-3.).

11-3. TROUBLESHOOTING CHECK TABLE

No.	Symptom	LED indication	Abnormal point/ Condition	Condition	Remedy
1	Outdoor unit does not operate.	1-time flash every 2.5 seconds	Outdoor power system	Overcurrent protection cut-out operates 3 consecutive times within 1 minute after the compressor gets started.	•Reconnect the connector of the compressor. •Refer to 11-5.Ⓐ "How to check inverter/compressor". •Check the stop valve.
2			Outdoor thermistors	Discharge temperature thermistor, fin temperature thermistor, defrost thermistor, P.C. board temperature thermistor, outdoor heat exchanger temperature thermistor or ambient temperature thermistor shorts or opens during compressor running.	•Refer to 11-5.Ⓖ "Check of outdoor thermistors".
3			Outdoor control system	Nonvolatile memory data cannot be read properly. (POWER lamp of the indoor unit lights up or flashes 7-time.)	•Replace the inverter P.C. board.
4		6-time flash 2.5 seconds OFF	Serial signal	The communication fails between the indoor and outdoor unit for 3 minutes.	•Check connection between the inverter P.C. board and the relay P.C. board. (**KJ50**) •Refer to 11-5.Ⓜ "How to check miswiring and serial signal error.
5		11-time flash 2.5 seconds OFF	Stop valve/ Closed valve	Closed valve is detected by compressor current.	•Check the stop valve.
6		14-time flash 2.5 seconds OFF	Outdoor unit (Other abnormality)	Outdoor unit is defective.	•Refer to 11-2.2. "Flow chart of the detailed outdoor unit failure mode recall function".
7		16-time flash 2.5 seconds OFF	4-way valve/ Pipe temperature	The 4-way valve does not work properly. The indoor coil thermistor detects an abnormal temperature.	•Refer to 11-5.Ⓗ "Check of R.V. coil". •Replace the inverter P.C. board.
8		17-time flash 2.5 seconds OFF	Outdoor refrigerant system abnormality	A closed valve and air trapped in the refrigerant circuit are detected based on the temperature sensed by the indoor and outdoor thermistors and the current of the compressor.	•Check for a gas leak in a connecting piping etc. •Check the stop valve. •Refer to 11-5. Ⓞ “Check of outdoor refrigerant circuit”.
9	'Outdoor unit stops and restarts 3 minutes later' is repeated.	2-time flash 2.5 seconds OFF	Overcurrent protection	Large current flows into power module (IC700) (**KJ25/35**)/ IGBT module (IC700) (**KJ50**).	•Reconnect the connector of the compressor. •Refer to 11-5.Ⓐ "How to check inverter/compressor". •Check the stop valve.
10		3-time flash 2.5 seconds OFF	Discharge temperature overheat protection	Temperature of discharge temperature thermistor exceeds 116°C, compressor stops. Compressor can restart if discharge temperature thermistor reads 100°C or less 3 minutes later.	•Check the refrigerant circuit and the refrigerant amount. •Refer to 11-5.Ⓚ "Check of LEV".
11		4-time flash 2.5 seconds OFF	Fin temperature / P.C. board temperature thermistor overheat protection	Temperature of the fin temperature thermistor on the heat sink exceeds 75 ~ 86°C (**KJ25/35**)/75 ~ 80°C (**KJ50**) or temperature of P.C. board temperature thermistor on the inverter P.C.board exceeds 72 ~ 85°C (**KJ25/35**)/70 ~ 75°C (**KJ50**).	•Check around the outdoor unit. •Check the outdoor unit air passage. •Refer to 11-5.Ⓘ "Check of outdoor fan motor".
12		5-time flash 2.5 seconds OFF	High pressure protection	Indoor coil thermistor exceeds 70°C in HEAT mode. Defrost thermistor exceeds 70°C in COOL mode.	•Check the refrigerant circuit and the refrigerant amount. •Check the stop valve.
13		8-time flash 2.5 seconds OFF	Compressor synchronous abnormality	The waveform of compressor current is distorted.	•Reconnect the connector of the compressor. •Refer to 11-5.Ⓐ "How to check inverter/compressor".
14		10-time flash 2.5 seconds OFF	Outdoor fan motor	Outdoor fan has stopped 3 times in a row within 30 seconds after outdoor fan start-up.	•Refer to 11-5.Ⓘ "Check of outdoor fan motor. •Refer to 11-5.Ⓛ "Check of inverter P.C. board.
15		12-time flash 2.5 seconds OFF	Each phase current of compressor	Each phase current of compressor cannot be detected normally.	•Refer to 11-5.Ⓐ "How to check inverter/compressor".
16		13-time flash 2.5 seconds OFF	Bus-bar voltage (DC)	Bus-bar voltage of inverter cannot be detected normally.	•It occurs with following case. Instantaneous power voltage drop. (Short time power failure) (**KJ50**) •Refer to 11-5. Ⓙ "Check of power supply". (**KJ50**) •Refer to 11-5.Ⓐ "How to check inverter/compressor".
17	Outdoor unit operates.	1-time flash 2.5 seconds OFF	Frequency drop by current protection	**KJ25/35**: When the input current exceeds approximately 10A (**KJ25**)/10.5A (**KJ35**), compressor frequency lowers. **KJ50**: Current from power outlet is nearing breaker capacity.	The unit is normal, but check the following. •Check if the indoor filters are clogged. •Check if the refrigerant is short. •Check if the indoor/outdoor unit air circulation is short cycled.
18		3-time flash 2.5 seconds OFF	Frequency drop by high pressure protection	Temperature of indoor coil thermistor exceeds 55°C in HEAT mode, compressor frequency lowers.	
			Frequency drop by defrosting in COOL mode	Indoor coil thermistor reads 8°C or less in COOL mode, compressor frequency lowers.	
19		4-time flash 2.5 seconds OFF	Frequency drop by discharge temperature protection	Temperature of discharge temperature thermistor exceeds 111°C, compressor frequency lowers.	•Check the refrigerant circuit and the refrigerant amount. •Refer to 11-5.Ⓚ "Check of LEV". •Refer to 11-5.Ⓖ "Check of outdoor thermistors".
20		5-time flash 2.5 seconds OFF	Outside temperature thermistor protection	When the outside temperature thermistor shorts or opens, protective operation without that thermistor is performed.	•Refer to 11-5. Ⓖ Check of outdoor thermistors.

No.	Symptom	LED indication	Abnormal point/ Condition	Condition	Remedy
21	Outdoor unit operates.	7-time flash 2.5 seconds OFF	Low discharge temperature protection	Temperature of discharge temperature thermistor has been 50°C or less for 20 minutes.	•Refer to 11-5.Ⓚ "Check of LEV". •Check the refrigerant circuit and the refrigerant amount.
22		8-time flash 2.5 seconds OFF	**MUFZ-KJ25/35** PAM protection PAM: Pulse Amplitude Modulation	The overcurrent flows into PFC (Power factor correction :IC820) or the bus-bar voltage reaches 394 V or more, PAM stops and restarts.	This is not malfunction. PAM protection will be activated in the following cases: 1 Instantaneous power voltage drop. (Short time power failure) 2 When the power supply voltage is high.
			MUFZ-KJ50 Zero cross detecting circuit	Zero cross signal cannot be detected.	•It occurs with following cases. 1 Instantaneous power voltage drop. (Short time power failure) 2 Distortion of primary voltage •Refer to 11-5. Ⓙ "Check of power supply".
23		9-time flash 2.5 seconds OFF	Inverter check mode	The connector of compressor is disconnected, inverter check mode starts.	•Check if the connector of the compressor is correctly connected. Refer to 11-5.Ⓐ "How to check inverter/compressor".

NOTE: 1. The location of LED is illustrated at the right figure. Refer to 11-6.1.
2. LED is lighted during normal operation.

The flashing frequency shows the number of times the LED blinks after every 2.5-second OFF.
(Example) When the flashing frequency is “2”.

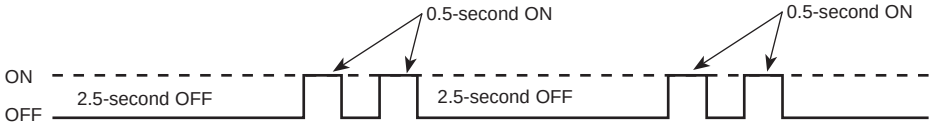

Inverter P.C. board

MUFZ-KJ25/35VEHZ

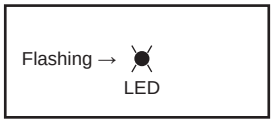

MUFZ-KJ50VEHZ

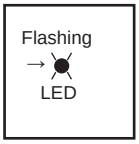

11-4. TROUBLE CRITERION OF MAIN PARTS

MUFZ-KJ25VEHZ
MUFZ-KJ35VEHZ
MUFZ-KJ50VEHZ

<table>
<tr><th>Part name</th><th>Check method and criterion</th><th>Figure</th></tr>
<tr><td>Defrost thermistor (RT61)

Fin temperature thermistor (RT64)

Ambient temperature thermistor (RT65)

Outdoor heat exchanger temperature thermistor (RT68)</td><td>Measure the resistance with a tester.

Refer to 11-6. “Test point diagram and voltage”, 1. “Inverter P.C. board”, for the chart of thermistor.</td><td></td></tr>
<tr><td>Discharge temperature thermistor (RT62)</td><td>Measure the resistance with a tester. Before measurement, hold the thermistor with your hands to warm it up.

Refer to 11-6. “Test point diagram and voltage”, 1. “Inverter P.C. board”, for the chart of thermistor.</td><td></td></tr>
<tr><td>Compressor</td><td>Measure the resistance between terminals using a tester. (Temperature: -10 ~ 40°C)
<table>
<tr><th></th><th colspan="2">Normal (Ω)</th></tr>
<tr><th></th><th>MUFZ-KJ25/35VEHZ</th><th>MUFZ-KJ50VEHZ</th></tr>
<tr><td>U-V
U-W
V-W</td><td>1.66 ~ 2.26</td><td>0.87 ~ 1.18</td></tr>
</table></td><td> 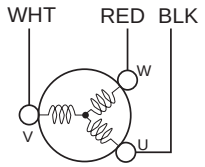
</td></tr>
<tr><td>Outdoor fan motor</td><td>Measure the resistance between lead wires using a tester. (Temperature: -10 ~ 40°C)
<table>
<tr><th rowspan="2">Color of lead wire</th><th colspan="2">Normal (Ω)</th></tr>
<tr><th>MUFZ-KJ25/35VEHZ</th><th>MUFZ-KJ50VEHZ</th></tr>
<tr><td>RED – BLK
BLK – WHT
WHT – RED</td><td>12 ~ 16</td><td>12 ~ 17</td></tr>
</table></td><td> 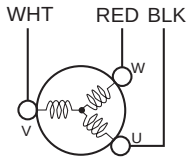
</td></tr>
<tr><td>R.V. coil (21S4)</td><td>Measure the resistance using a tester. (Temperature: -10 ~ 40°C)
<table>
<tr><th colspan="2">Normal (kΩ)</th></tr>
<tr><th>MUFZ-KJ25/35VEHZ</th><th>MUFZ-KJ50VEHZ</th></tr>
<tr><td>1.41 ~ 2.00</td><td>1.19 ~ 1.78</td></tr>
</table></td><td></td></tr>
<tr><td>Expansion valve coil (LEV)</td><td>Measure the resistance using a tester. (Temperature: -10 ~ 40°C)
<table>
<tr><th rowspan="2">Color of lead wire</th><th>Normal (Ω)</th></tr>
<tr><th>MUFZ-KJ25/35/50VEHZ</th></tr>
<tr><td>RED – ORN</td><td rowspan="4">37 ~ 54</td></tr>
<tr><td>RED – WHT</td></tr>
<tr><td>RED – BLU</td></tr>
<tr><td>RED – YLW</td></tr>
</table></td><td> 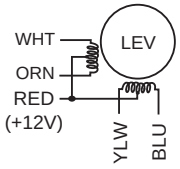
</td></tr>
<tr><td>Defrost heater</td><td>Measure the resistance using a tester. (Temperature: -10 ~ 40°C)
<table>
<tr><th colspan="2">Normal (Ω)</th></tr>
<tr><th>MUFZ-KJ25/35VEHZ</th><th>MUFZ-KJ50VEHZ</th></tr>
<tr><td>370 ~ 428</td><td>376 ~ 461</td></tr>
</table></td><td></td></tr>
</table>

11-5. TROUBLESHOOTING FLOW

Ⓐ How to check inverter/compressor

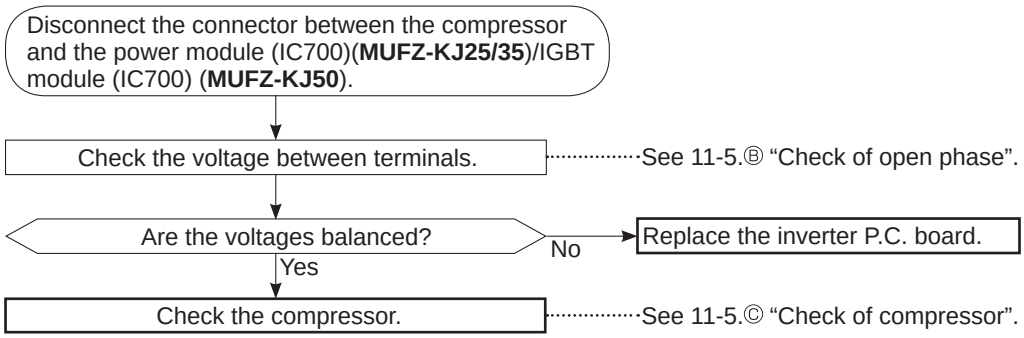

Ⓑ Check of open phase

- With the connector between the compressor and the power module (IC700) (**MUFZ-KJ25/35**)/IGBT module (IC700) (**MUFZ-KJ50**) disconnected, activate the inverter and check if the inverter is normal by measuring **the voltage balance** between the terminals.

  Output voltage is 50 - 130 V. (The voltage may differ according to the tester.)

<< Operation method>>
Start cooling or heating operation by pressing EMERGENCY OPERATION switch on the indoor unit. (TEST RUN OPERATION: Refer to 8-3.)

<<Measurement point>>
At 3 points
BLK (U)-WHT (V)
BLK (U)-RED (W)
WHT(V)-RED (W)

※ Measure AC voltage between the lead wires at 3 points.

NOTE: 1. Output voltage varies according to the power supply voltage.
2. Measure the voltage by analog type tester.
3. During this check, LED of the inverter P.C. board flashes 9 times. (Refer to 11-6.1.)

Ⓒ Check of compressor

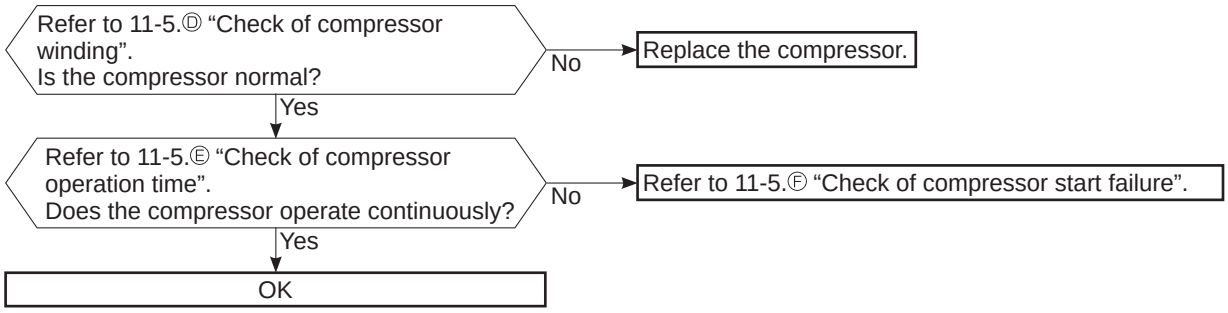

Ⓓ Check of compressor winding

●Disconnect the connector between the compressor and the power module (IC700) (**MUFZ-KJ25/35**)/IGBT module (IC700) (**MUFZ-KJ50**), and measure the resistance between the compressor terminals.

<<Measurement point>>

At 3 points
BLK-WHT
BLK-RED
WHT-RED

※ Measure the resistance between the lead wires at 3 points.

<<Judgement>>

Refer to 11-4.
0 [Ω] ·····Abnormal [short]
Infinite [Ω] ·····Abnormal [open]
NOTE: Be sure to zero the ohmmeter before measurement.

Ⓔ Check of compressor operation time

● Connect the compressor and activate the inverter. Then measure the time until the inverter stops due to overcurrent.
<<Operation method>>
Start heating or cooling operation by pressing EMERGENCY OPERATION switch on the indoor unit. (TEST RUN OPERATION: Refer to 8-3.)
<<Measurement>>
Measure the time from the start of compressor to the stop of compressor due to overcurrent.

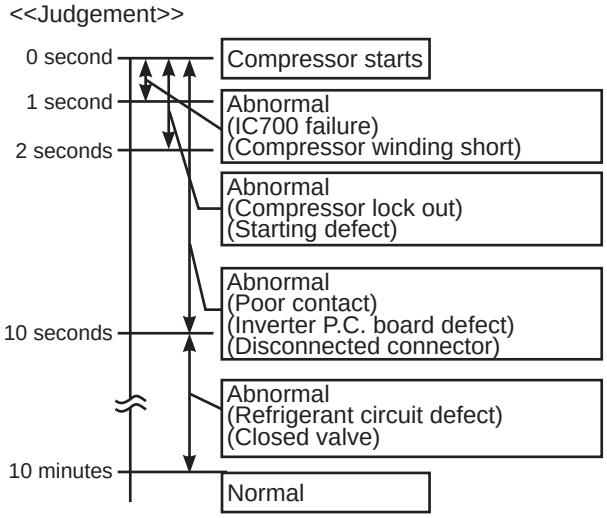

Ⓕ Check of compressor start failure

Confirm that ①~④ is normal.
•Electrical circuit check
①. Contact of the compressor connector
②. Output voltage of inverter P.C. board and balance of them (See 11-5.Ⓑ)
③. Direct current voltage between DB61(+) and (-) (**MUFZ-KJ25/35**)/JP715(+) and JP30(-) (**MUFZ-KJ50**) on the inverter P.C. board
④. Voltage between outdoor terminal block S1-S2

↓

Does the compressor run for 10 seconds or more after it starts?
- Yes → Check the refrigerant circuit. Check the stop valve.
- No ↓

After the compressor is heated with a drier, does the compressor start? ※1
- No → Replace the compressor.
- Yes ↓

Compressor start failure. Activate pre-heat control. (Refer to 10-2. "PRE-HEAT CONTROL SETTING")

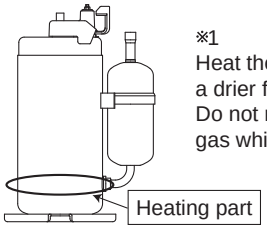

※1
Heat the compressor with a drier for about 20 minutes. Do not recover refrigerant gas while heating.

Ⓖ Check of outdoor thermistors

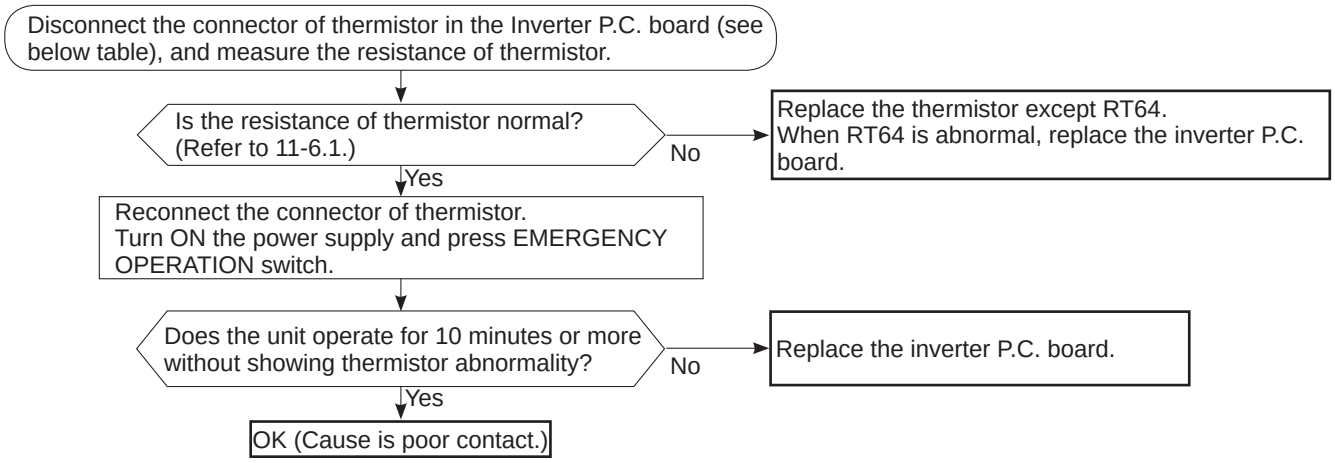

MUFZ-KJ25/35

Thermistor	Symbol	Connector, Pin No.	Board
Defrost	RT61	Between CN641 pin1 and pin2	Inverter P.C. board
Discharge temperature	RT62	Between CN641 pin3 and pin4	
Fin temperature	RT64	Between CN642 pin1 and pin2	
Ambient temperature	RT65	Between CN643 pin1 and pin2	
Outdoor heat exchanger temperature	RT68	Between CN644 pin1 and pin3	

MUFZ-KJ50

Thermistor	Symbol	Connector, Pin No.	Board
Defrost	RT61	Between CN671 pin1 and pin2	Inverter P.C. board
Discharge temperature	RT62	Between CN671 pin3 and pin4	
Fin temperature	RT64	Between CN673 pin1 and pin2	
Ambient temperature	RT65	Between CN672 pin1 and pin2	
Outdoor heat exchanger temperature	RT68	Between CN671 pin5 and pin6	

Ⓗ Check of R.V. coil

MUFZ-KJ25/35

※ First of all, measure the resistance of R.V. coil to check if the coil is defective. Refer to 11-4.
※ In case CN721 is disconnected or R.V. coil is open, voltage is generated between the terminal pins of the connector although no signal is being transmitted to R.V. coil.
Check if CN721 is connected.

Unit operates COOL mode even if it is set to HEAT mode.

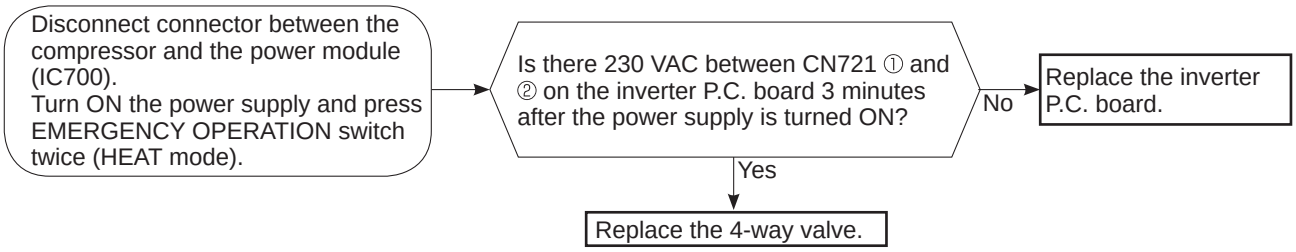

Unit operates HEAT mode even if it is set to COOL mode.

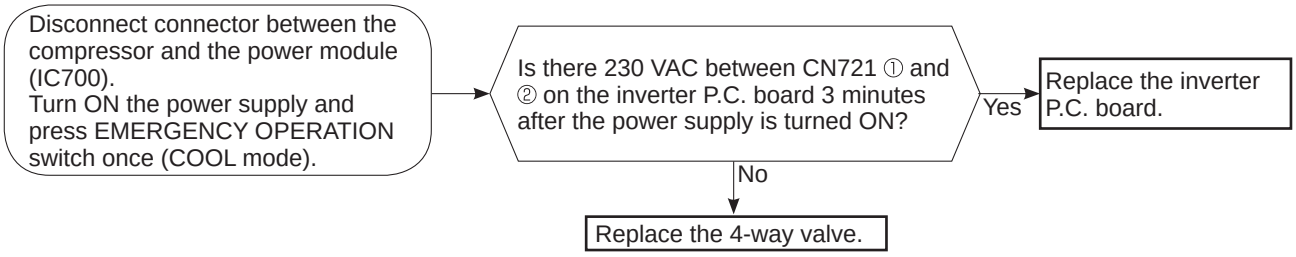

MUFZ-KJ50

※ First of all, measure the resistance of R.V. coil to check if the coil is defective. Refer to 11-4.
※ In case CN602 is disconnected or R.V. coil is open, voltage is generated between the terminal pins of the connector although no signal is being transmitted to R.V. coil.
Check if CN602 is connected.

Unit operates COOL mode even if it is set to HEAT mode.

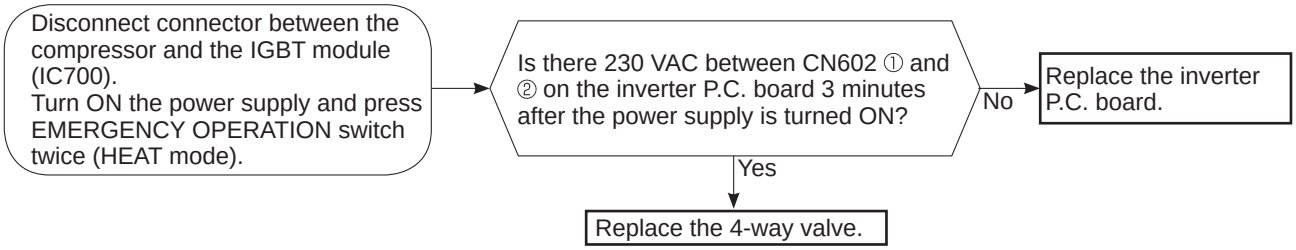

Unit operates HEAT mode even if it is set to COOL mode.

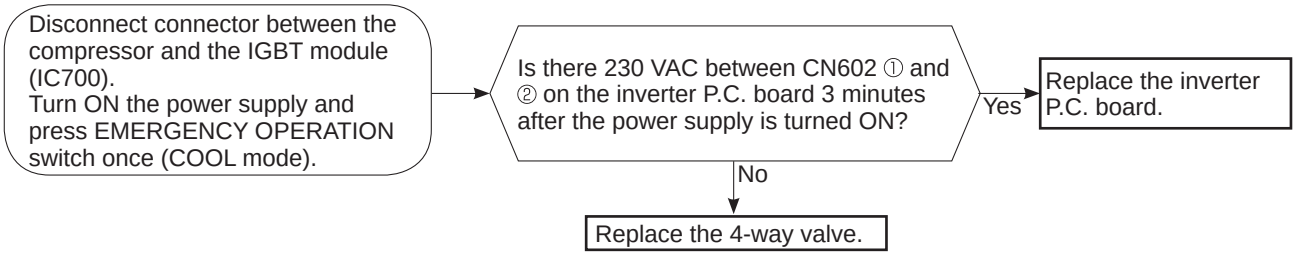

Ⓘ Check of outdoor fan motor

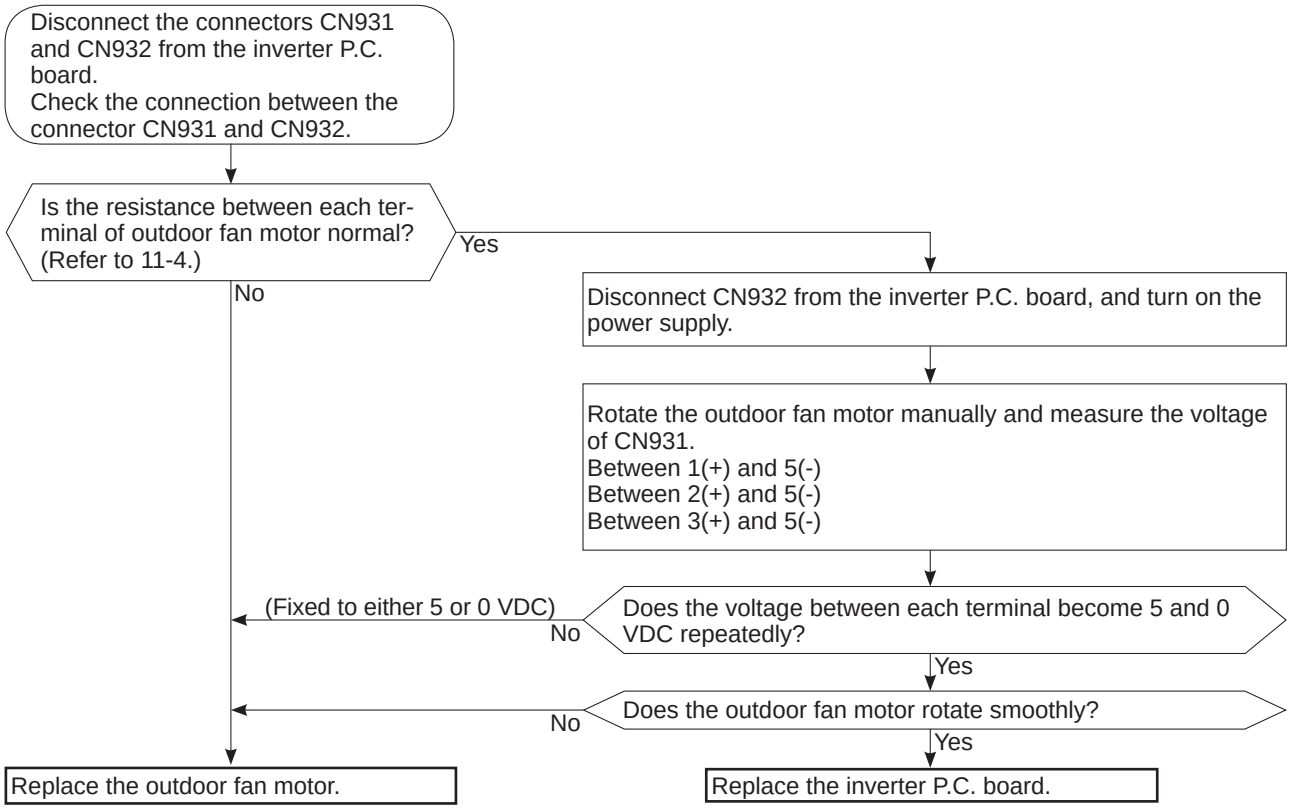

Ⓙ Check of power supply

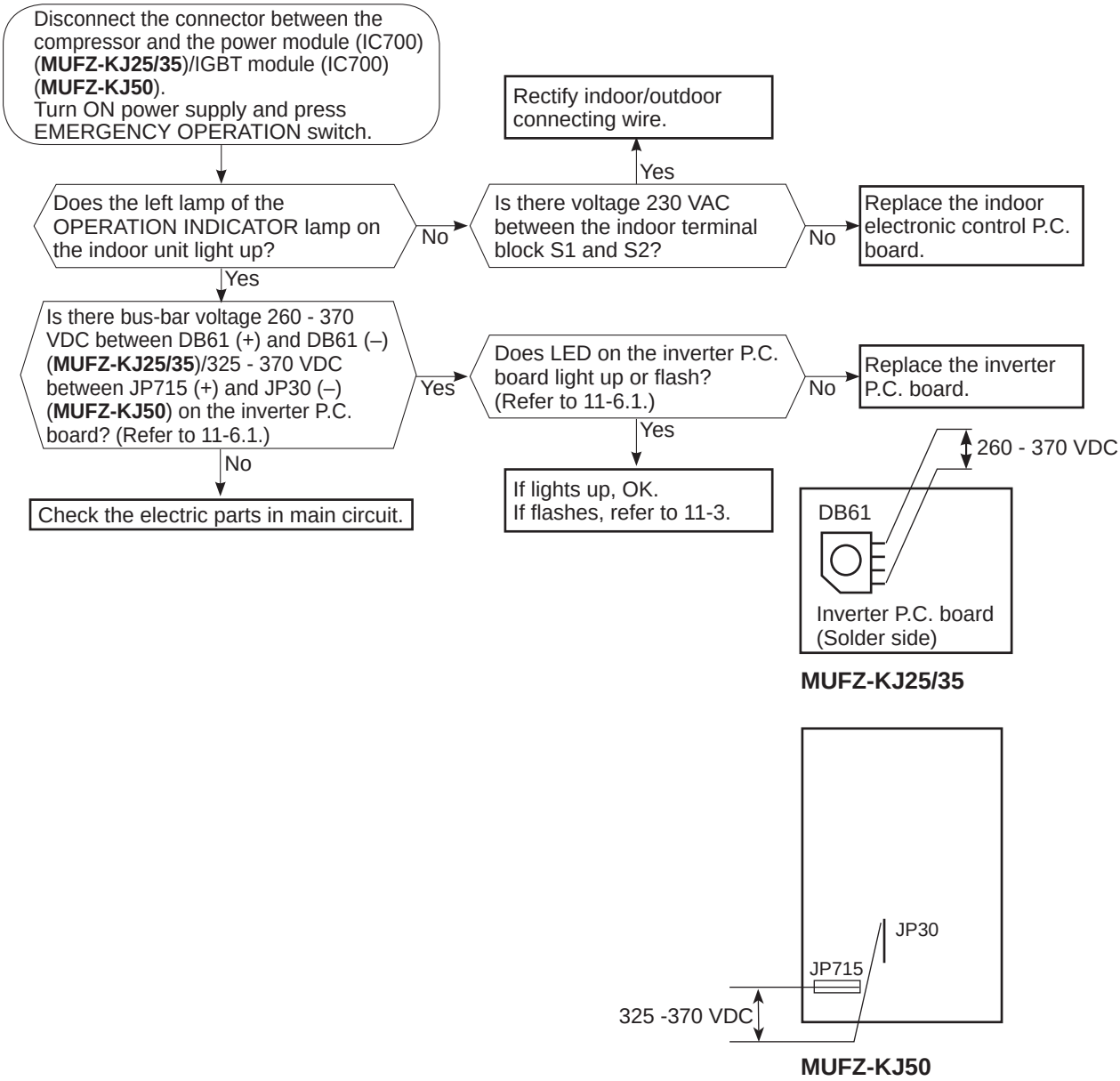

Ⓚ Check of LEV (Expansion valve)

MFZ-KJ25VE
MFZ-KJ35VE
MFZ-KJ50VE

MFZ-KJ25VE2
MFZ-KJ35VE2
MFZ-KJ50VE2

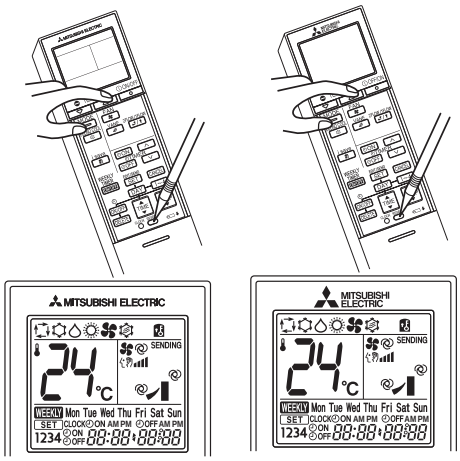

Turn ON the power supply.
<Preparation of the remote controller>
① While pressing both OPERATION SELECT (MODE) button and TEMP ⊕ button on the remote controller at the same time, press RESET button.
② First, release RESET button.
Hold down the other 2 buttons for another 3 seconds. Make sure that the indicators on the LCD screen shown in the right figure are all displayed. Then release the buttons.

↓

Press OPERATE/STOP (ON/OFF)(**MFZ-KJ25/35/50VE**)/ STOP/OPERATE (OFF/ON)(**MFZ-KJ25/35/50VE2**) button of the remote controller (the set temperature is displayed) with the remote controller headed towards the indoor unit. ※1

↓

Expansion valve operates in full-opening direction.

↓

Do you hear the expansion valve "click, click·····"?
Do you feel the expansion valve vibrates on touching it ?
- Yes → OK
- No ↓

Is LEV coil properly fixed to the expansion valve?
- No → Properly fix the LEV coil to the expansion valve.
- Yes ↓

Does the resistance of LEV coil have the characteristics? (Refer to 11-4.)
- No → Replace the LEV coil.
- Yes →

Measure each voltage between connector pins of CN724 on the inverter P.C. board.
1. Pin③(-) — Pin①(+)
2. Pin④(-) — Pin①(+)
3. Pin⑤(-) — Pin①(+)
4. Pin⑥(-) — Pin①(+)

Is there about 3 - 5 VAC between each?
NOTE: Measure the voltage by an analog tester.
- No → Replace the inverter P.C. board.
- Yes → Replace the expansion valve.

※1. Regardless of normal or abnormal condition, a short beep is emitted once the signal is received.

NOTE: After check of LEV, do the undermentioned operations.
1. Turn OFF the power supply and turn it ON again.
2. Press RESET button on the remote controller.

Ⓛ Check of inverter P.C. board

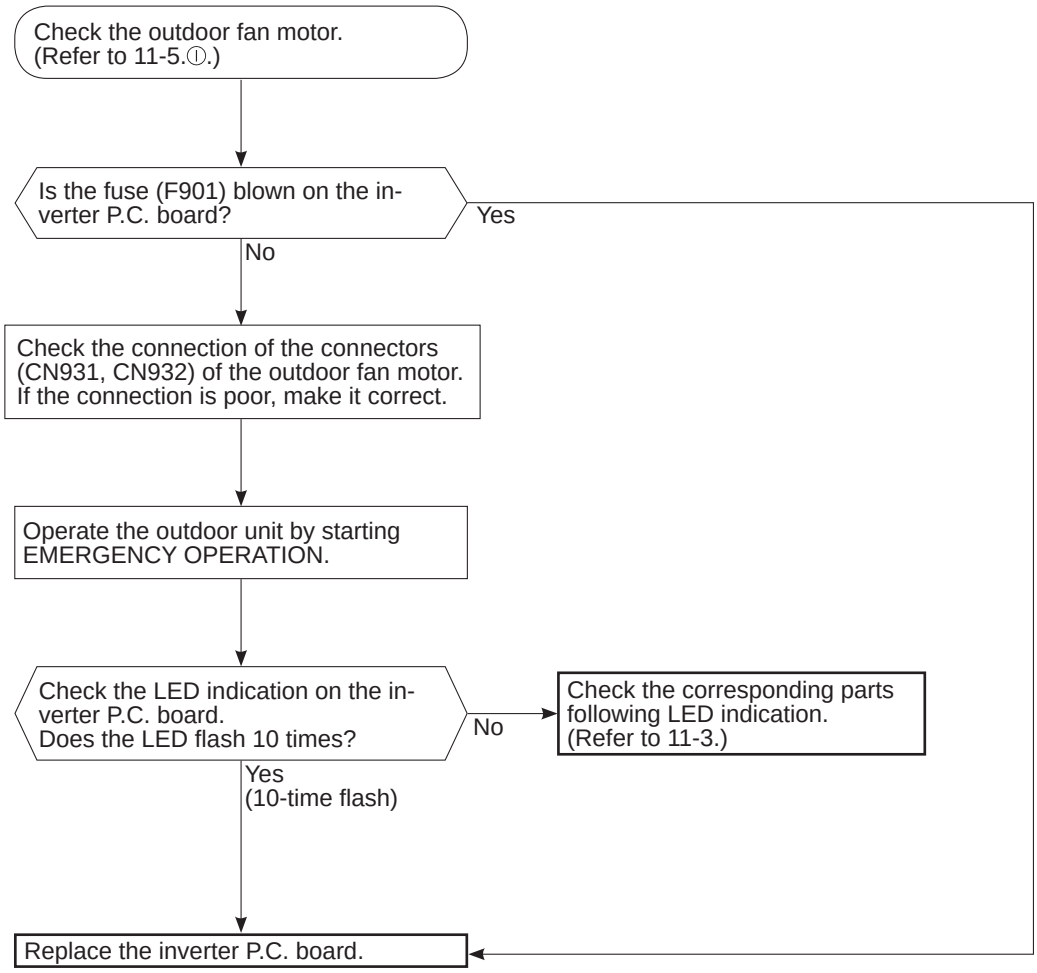

Ⓜ How to check miswiring and serial signal error

MUFZ-KJ25/35

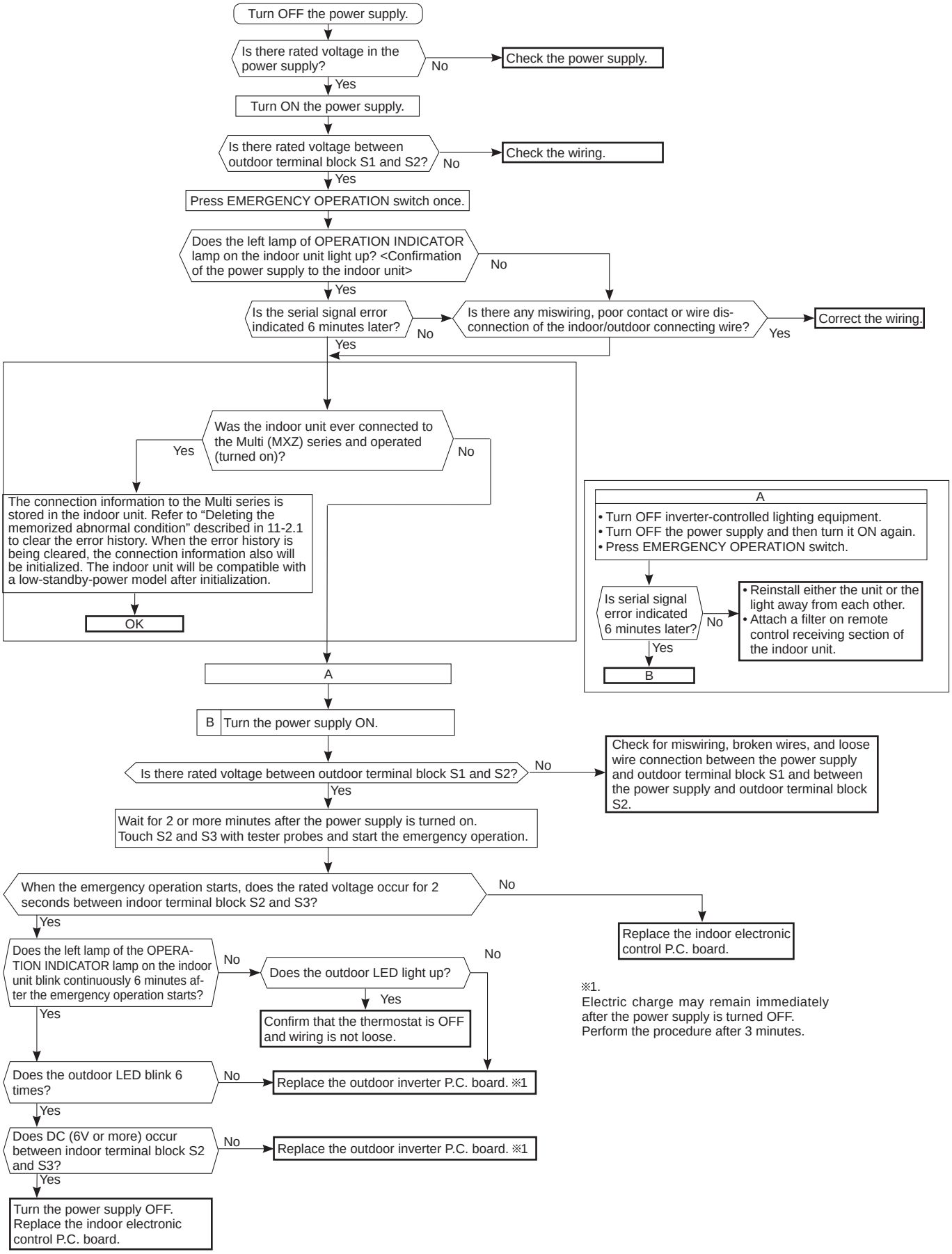

※1.
Electric charge may remain immediately after the power supply is turned OFF.
Perform the procedure after 3 minutes.

MUFZ-KJ50

NOTE: Refer to the indoor unit service manual.

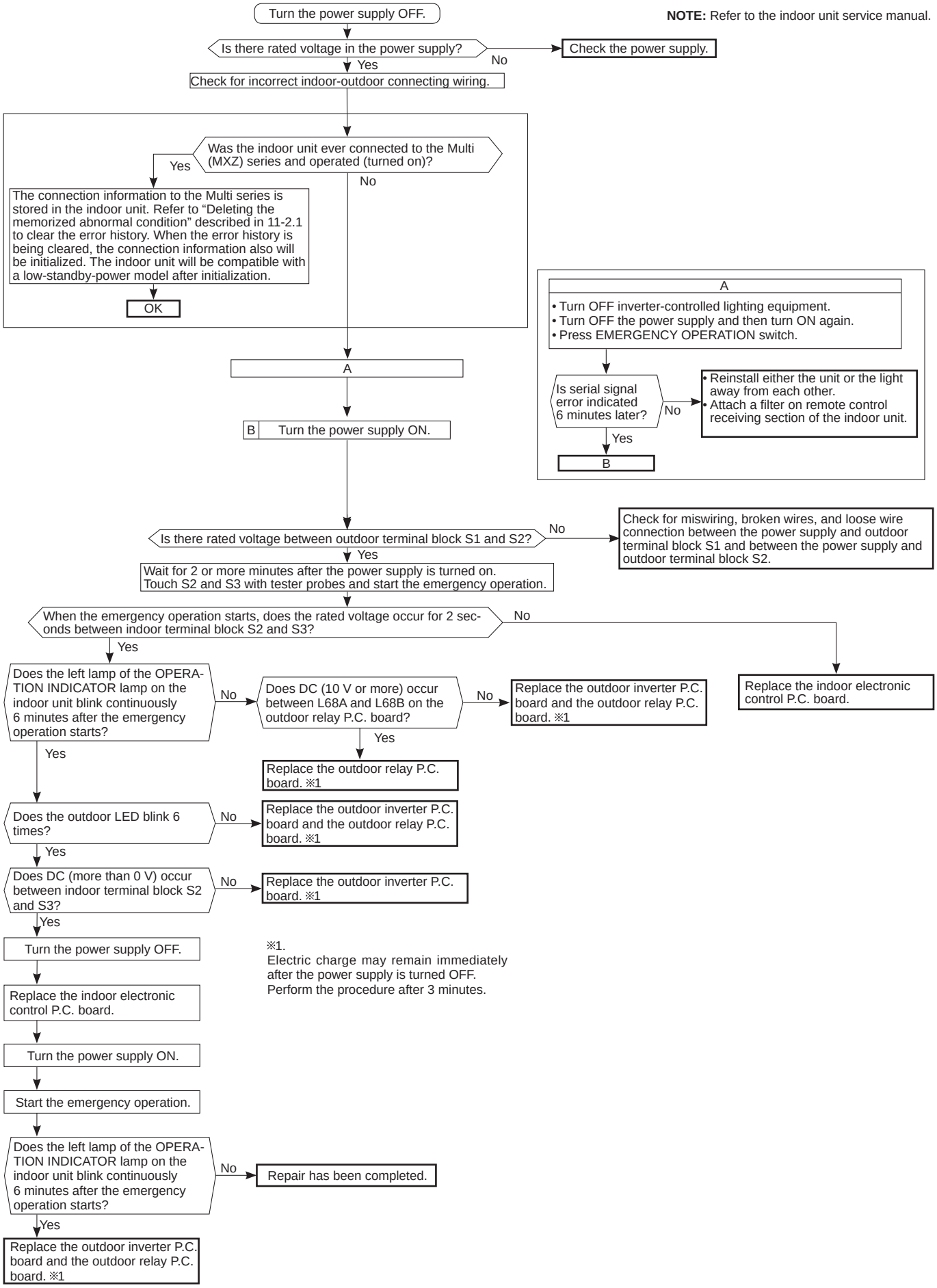

Ⓝ Check of defrost heater

Check the following points before checking electric continuity.
1. Does the resistance of ambient temperature thermistor have the characteristics? Refer to 11-6.1.
2. Is the resistance of defrost heater normal? Refer to 11-4.
3. Does the heater protector remain conducted (not open)?
4. Are both ambient temperature thermistor and circuit of defrost heater securely connected to connectors?

In HEAT mode, for more than 5 minutes, let the ambient temperature thermistor continue to read 0°C or below, and let the defrost thermistor continue to read -1°C or below.

NOTE: In case both thermistors are more than the above temperature, cool them with cold water etc...

Is there 230 VAC between CN722 ① and ③ (**MUFZ-KJ25/35**)/CN601 ① and ② (**MUFZ-KJ50**) on the inverter P.C. board? Refer to 11-6.1.

- Yes → Not the problem of the inverter P.C. board.
- No → Replace the inverter P.C. board.

Ⓞ Check of outdoor refrigerant circuit

Has the operation stopped during pump down?

- Yes → The operation has stopped to prevent the diesel explosion caused by air trapped in the refrigerant circuit. Close the stop valve, and disconnect the power plug or turn the breaker OFF. ※
- No → Was the operation started with the stop valve closed, and was it opened during operation?
  - Yes → The unit occasionally stops when the stop valve is opened or closed during operation. Open the stop valve and start the cooling operation again.
  - No → The refrigerant gas amount may be 60% or less than the normal amount. Identify where the gas is leaking from, and fix the leak.

※ **CAUTION : Do not start the operation again to prevent hazards.**

Ⓟ Electromagnetic noise enters into TV sets or radios

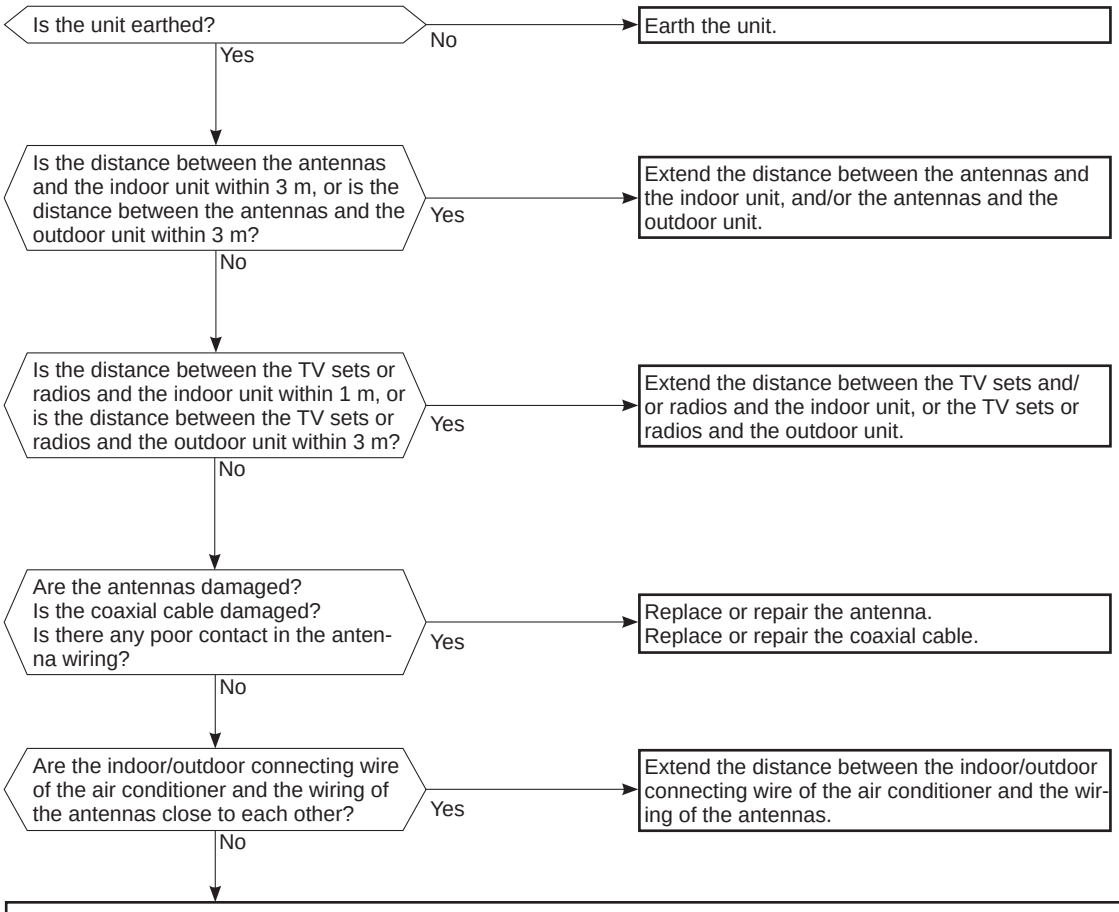

Even if all of the above conditions are fulfilled, the electromagnetic noise may enter, depending on the electric field strength or the installation condition (combination of specific conditions such as antennas or wiring).
Check the following before asking for service.

1. Devices affected by the electromagnetic noise
   TV sets, radios (FM/AM broadcast, shortwave)
2. Channel, frequency, broadcast station affected by the electromagnetic noise
3. Channel, frequency, broadcast station unaffected by the electromagnetic noise
4. Layout of:
   indoor/outdoor unit of the air conditioner, indoor/outdoor wiring, earth wire, antennas, wiring from antennas, receiver
5. Electric field intensity of the broadcast station affected by the electromagnetic noise
6. Presence or absence of amplifier such as booster
7. Operation condition of air conditioner when the electromagnetic noise enters in
   1) Turn OFF the power supply once, and then turn ON the power supply. In this situation, check for the electromagnetic noise.
   2) Within 3 minutes after turning ON the power supply, press OPERATE/STOP (ON/OFF)(**MFZ-KJ25/35/50VE**)/ STOP/OPERATE (OFF/ON)(**MFZ-KJ25/35/50VE2**) button on the remote controller for power ON, and check for the electromagnetic noise.
   3) After a short time (3 minutes later after turning ON), the outdoor unit starts running. During operation, check for the electromagnetic noise.
   4) Press OPERATE/STOP (ON/OFF)(**MFZ-KJ25/35/50VE**)/ STOP/OPERATE (OFF/ON)(**MFZ-KJ25/35/50VE2**) button on the remote controller for power OFF, when the outdoor unit stops but the indoor/outdoor communication still runs on. In this situation, check for the electromagnetic noise.

11-6. TEST POINT DIAGRAM AND VOLTAGE

1. Inverter P.C. board

MUFZ-KJ25VEHZ
MUFZ-KJ35VEHZ

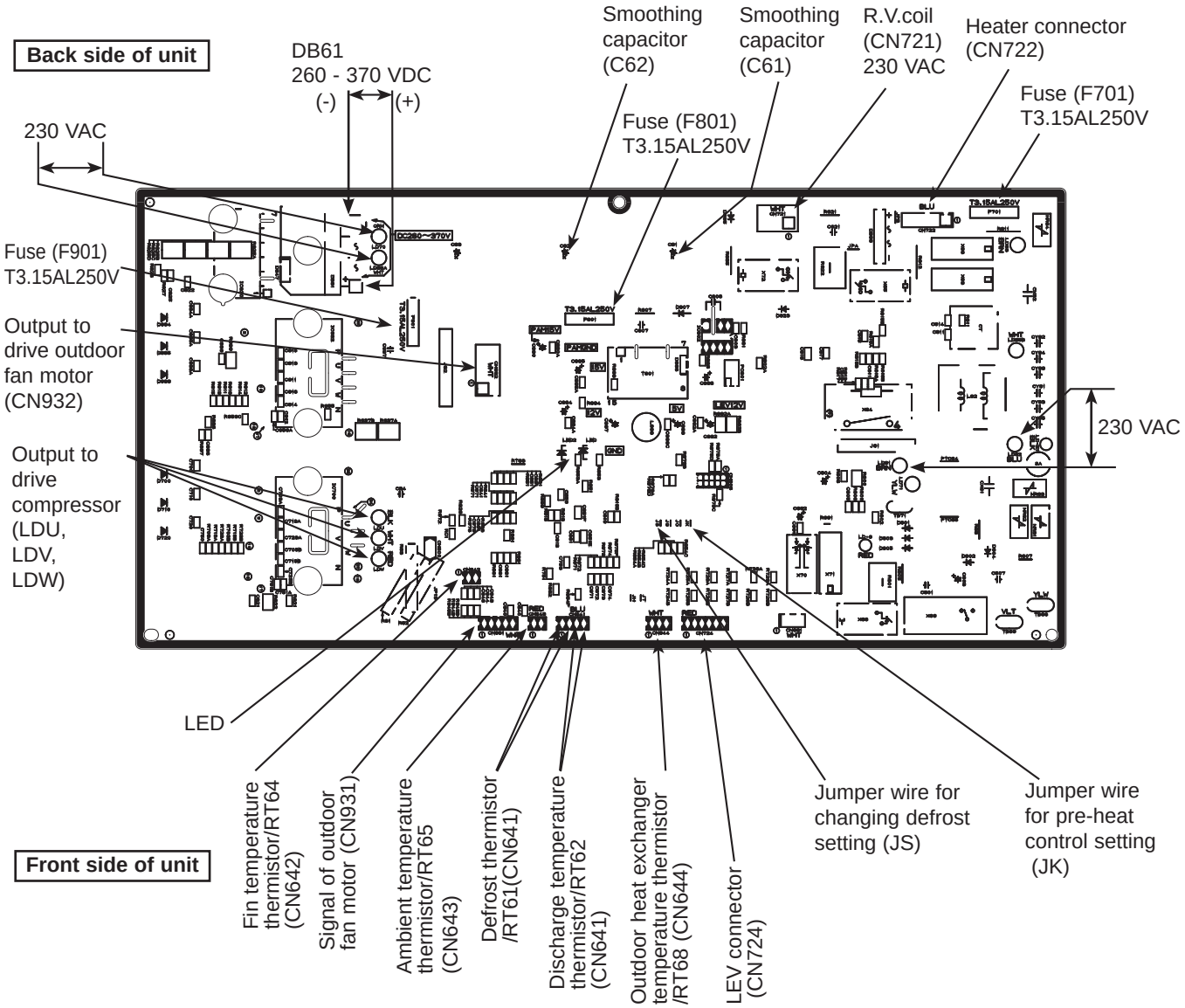

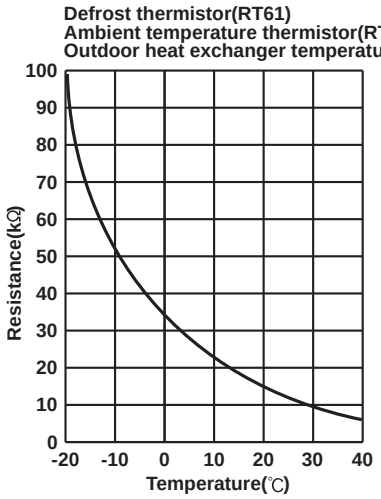

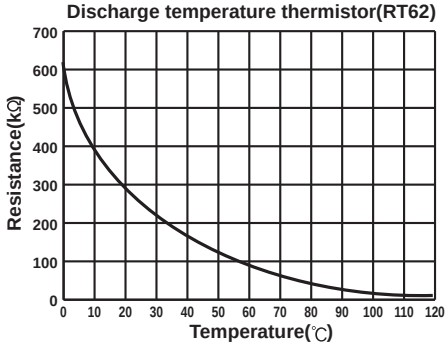

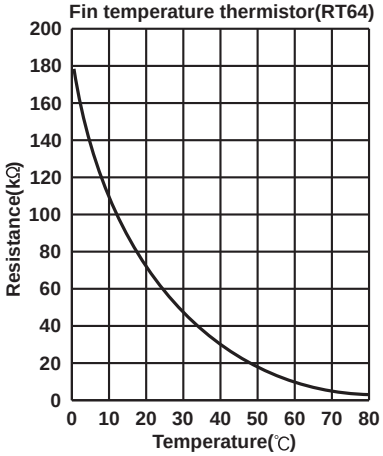

MUFZ-KJ50VEHZ

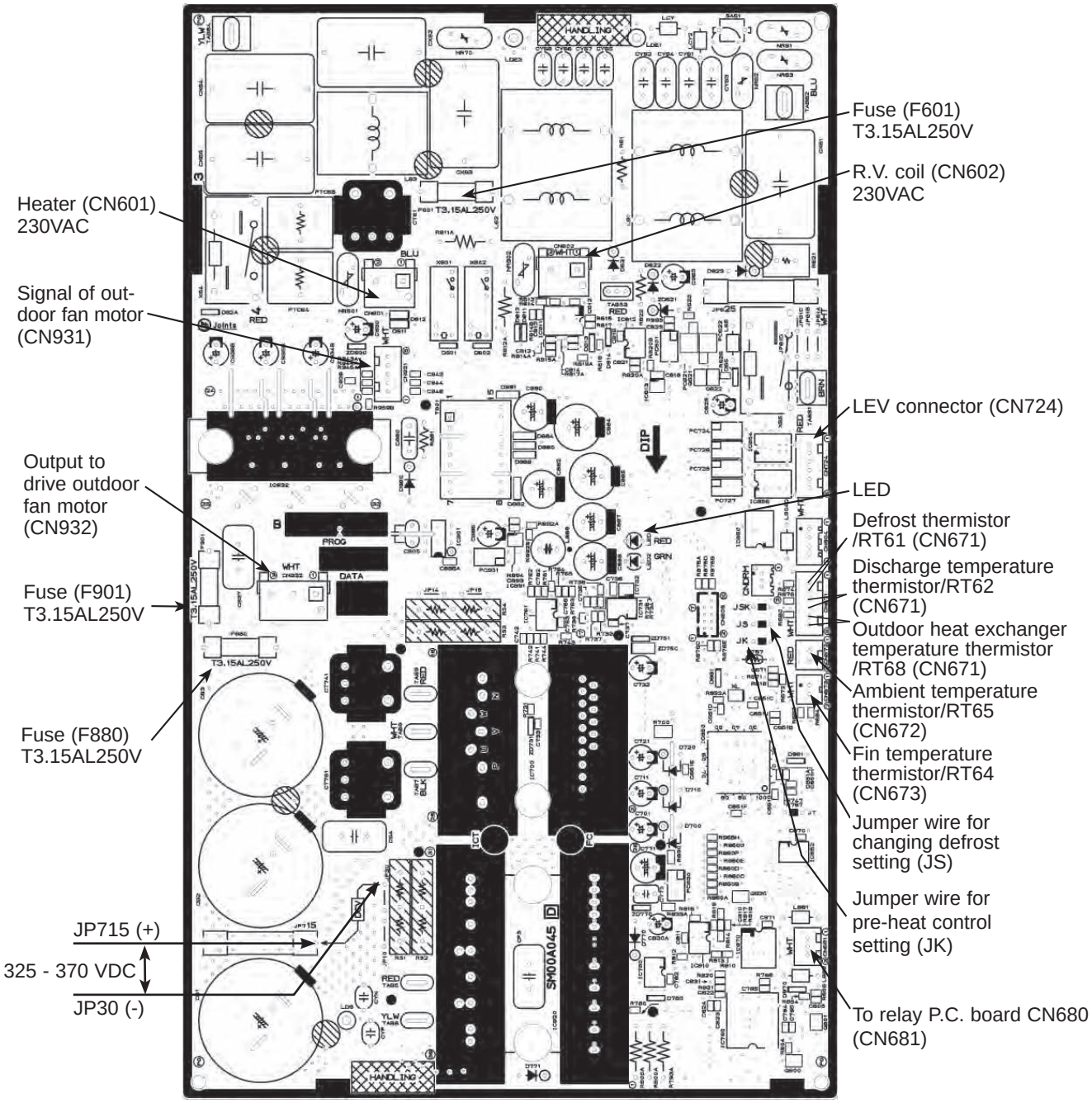

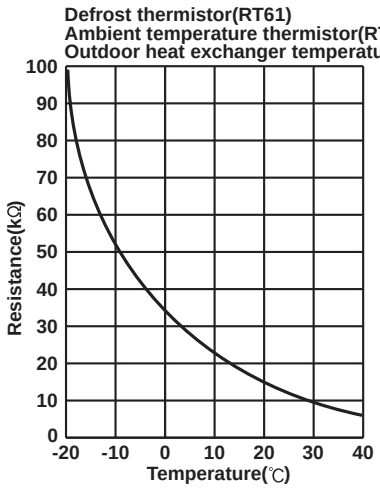

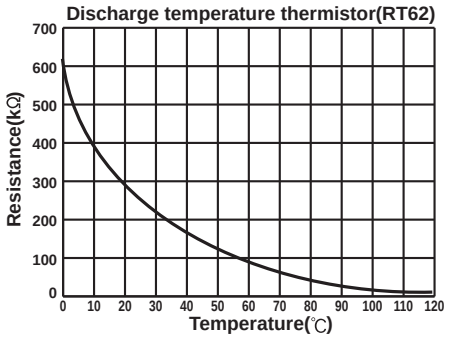

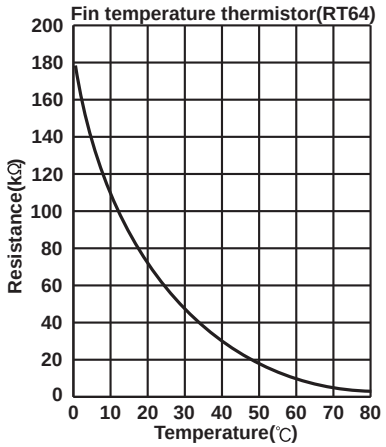

2. Relay P.C. board
MUFZ-KJ50VEHZ

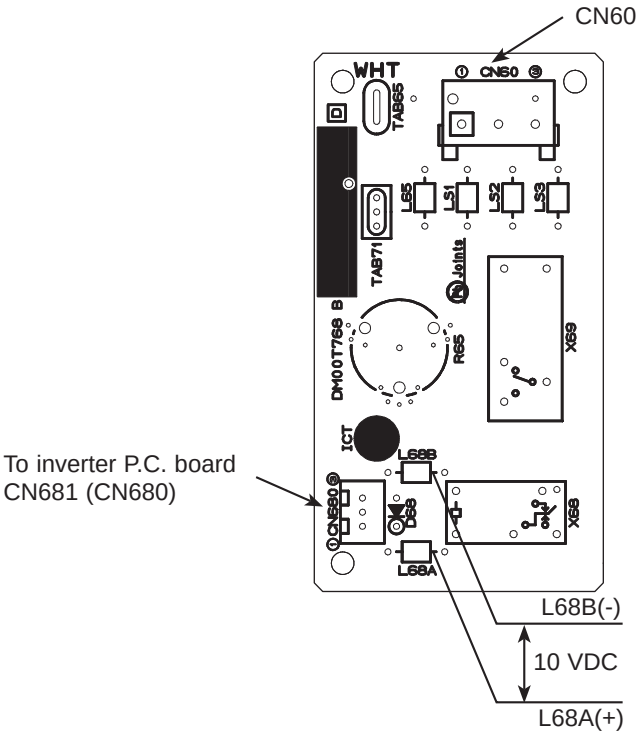

12 DISASSEMBLY INSTRUCTIONS

<"Terminal with locking mechanism" Detaching points>

The terminal which has the locking mechanism can be detached as shown below.
There are 2 types (refer to (1) and (2)) of the terminal with locking mechanism.
The terminal without locking mechanism can be detached by pulling it out.
Check the shape of the terminal before detaching.

(1) Slide the sleeve and check if there is a locking lever or not.

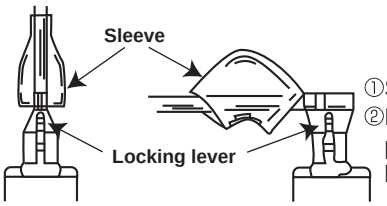

①Slide the sleeve.
②Pull the terminal while pushing the locking lever.

(2) The terminal with this connector has the locking mechanism.

①Hold the sleeve, and pull out the terminal slowly.

12-1. MUFZ-KJ25VEHZ MUFZ-KJ35VEHZ

NOTE: Turn OFF the power supply before disassembly.

OPERATING PROCEDURE	PHOTOS
1. Removing the cabinet (1) Remove the screw fixing the service panel. (2) Pull down the service panel and remove it. (3) Disconnect the power supply and indoor/outdoor connecting wire. (4) Remove the screws fixing the top panel. (5) Remove the top panel. (6) Remove the screws fixing the cabinet. (7) Remove the cabinet. (8) Remove the screws fixing the back panel. (9) Remove the back panel.	**Photo 1** 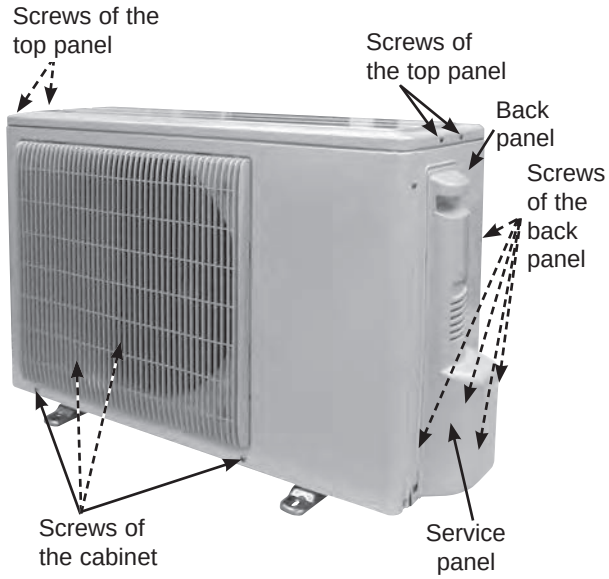 **Photo 2** 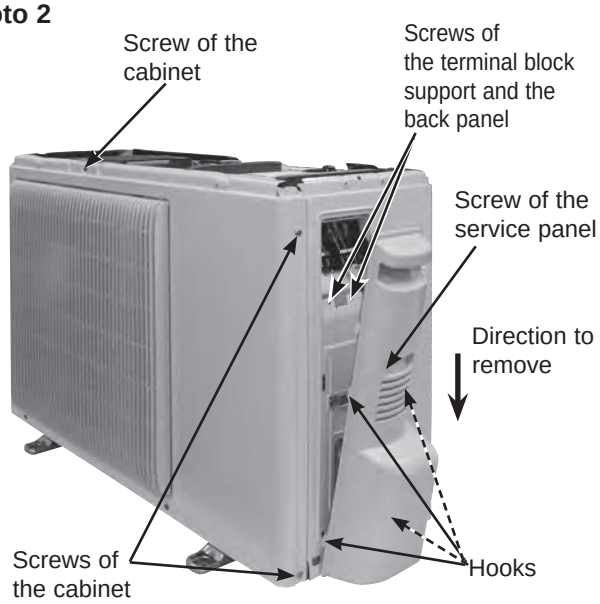

OPERATING PROCEDURE	PHOTOS

2. Removing the inverter assembly, inverter P.C. board

(1) Remove the cabinet and panels. (Refer to 1.)
(2) Disconnect the lead wire to the reactor and the following connectors:
<Inverter P.C. board>
CN721 (R.V. coil)
CN722 (Defrost heater)
CN931, CN932 (Fan motor)
CN641 (Defrost thermistor and discharge temperature thermistor)
CN643 (Ambient temperature thermistor)
CN644 (Outdoor heat exchanger temperature thermistor)
CN724 (LEV)
(3) Remove the compressor connector (CN61).
(4) Remove the screws fixing the heat sink support and the separator.
(5) Remove the fixing screws of the terminal block support and the back panel.
(6) Remove the inverter assembly.
(7) Remove the screw of the earth wire and screw of the terminal block support.
(8) Remove the heat sink support from the P.C. board support.
(9) Remove the screw of the inverter P.C. board and remove the inverter P.C. board from the P.C. board support.

Photo 3

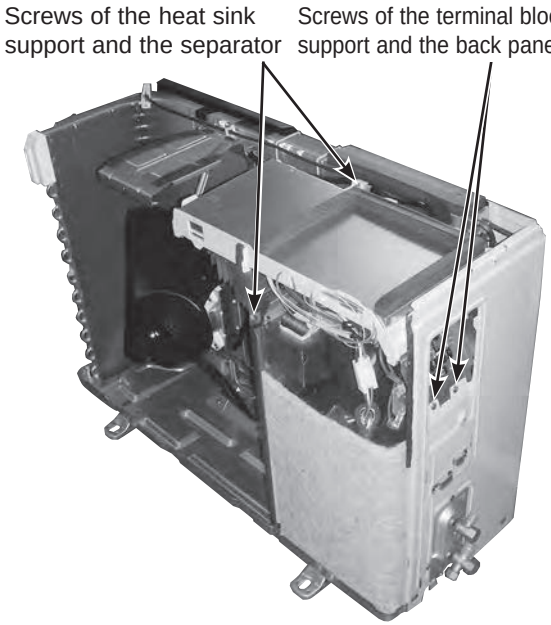

Photo 4 (Inverter assembly)

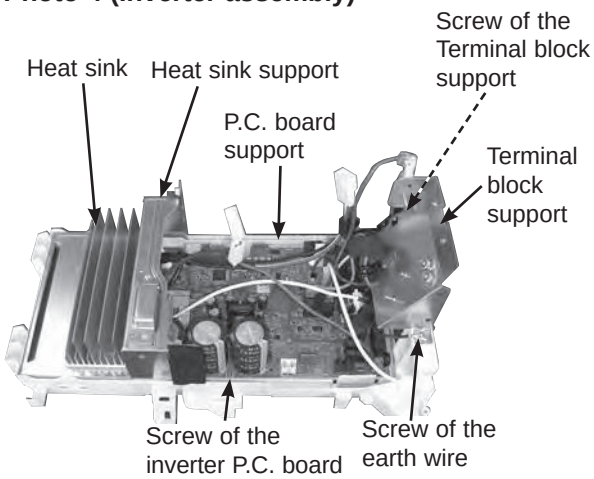

3. Removing R.V. coil

(1) Remove the cabinet and panels. (Refer to 1.)
(2) Disconnect the following connectors:
<Inverter P.C. board>
CN721 (R.V. coil)
(3) Remove the R.V. coil.

4. Removing the discharge temperature thermistor, defrost thermistor, outdoor heat exchanger temperature thermistor and ambient temperature thermistor

(1) Remove the cabinet and panels. (Refer to 1.)
(2) Disconnect the lead wire to the reactor and the following connectors:
<Inverter P.C. board>
CN641 (Defrost thermistor and discharge temperature thermistor)
CN643 (Ambient temperature thermistor)
CN644 (Outdoor heat exchanger temperature thermistor)
(3) Pull out the discharge temperature thermistor from its holder.
(4) Pull out the defrost thermistor from its holder. (Photo 6)
(5) Pull out the outdoor heat exchanger temperature thermistor from its holder. (Photo 6)
(6) Pull out the ambient temperature thermistor from its holder.

Photo 5

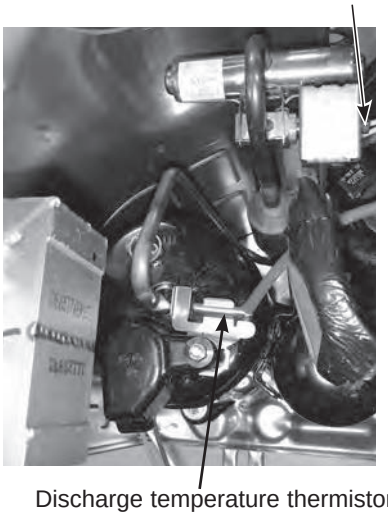

OPERATING PROCEDURE	PHOTOS

5. Removing outdoor fan motor

(1) Remove the cabinet and panels. (Refer to 1.)
(2) Disconnect the following connectors:
<Inverter P.C. board>
CN931, CN932 (Fan motor)
(3) Remove the propeller fan nut.
(4) Remove the propeller fan.
(5) Remove the screws fixing the fan motor.
(6) Remove the fan motor.

Photo 6

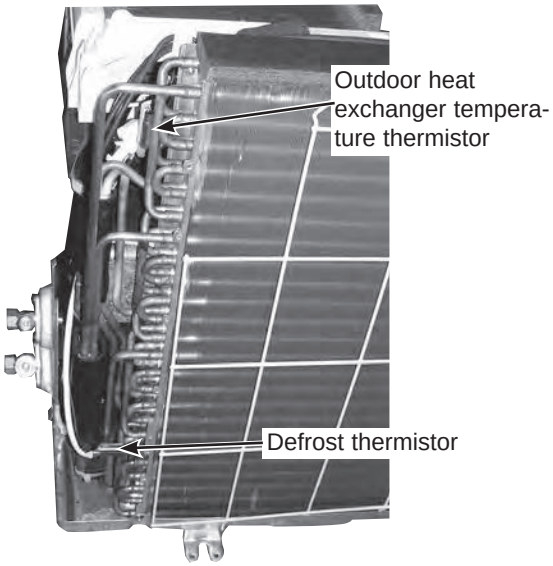

6. Removing the compressor and 4-way valve

(1) Remove the cabinet and panels. (Refer to 1.)
(2) Remove the inverter assembly. (Refer to 2.)
(3) Recover gas from the refrigerant circuit.
NOTE: Recover gas from the pipes until the pressure gauge shows 0 kg/cm^2 (0 MPa).
(4) Detach the brazed part of the suction and the discharge pipe connected with compressor.
(5) Remove the nuts of compressor legs.
(6) Remove the compressor.
(7) Detach the brazed part of pipes connected with 4-way valve.

Photo 7

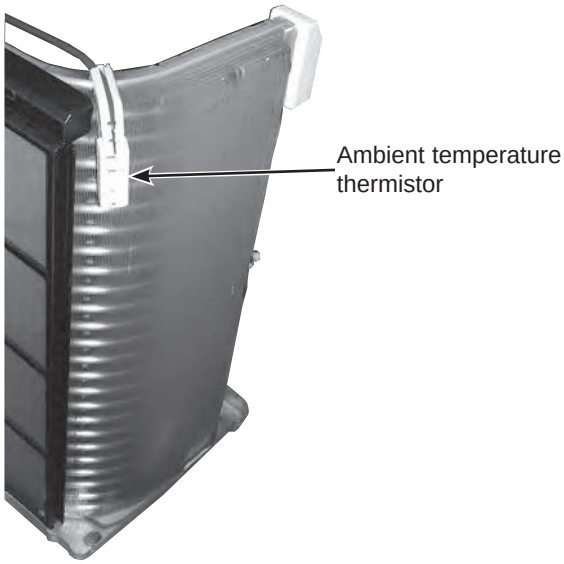

Photo 8

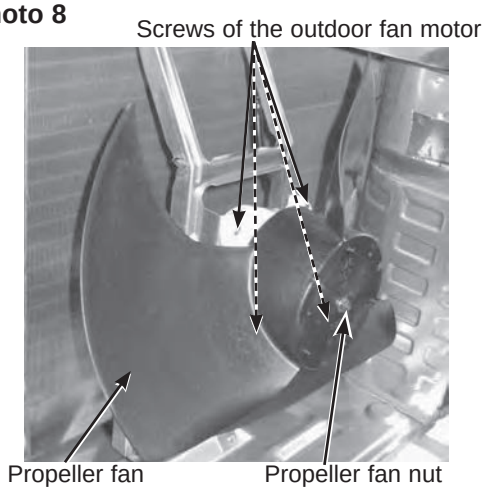

Photo 9

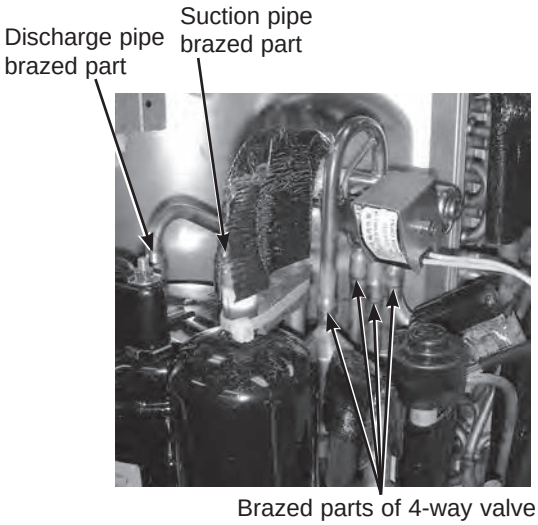

12-2. MUFZ-KJ50VEHZ

NOTE: Turn OFF the power supply before disassembly.

OPERATING PROCEDURE	PHOTOS
1. Removing the cabinet (1) Remove the screws of the service panel. (2) Remove the screws of the top panel. (3) Remove the screw of the valve cover. (4) Remove the service panel. (5) Remove the top panel. (6) Remove the valve cover. (7) Disconnect the power supply and indoor/outdoor connecting wire. (8) Remove the screws of the cabinet. (9) Remove the cabinet. (10) Remove the screws of the back panel. (11) Remove the back panel. **Photo 2** 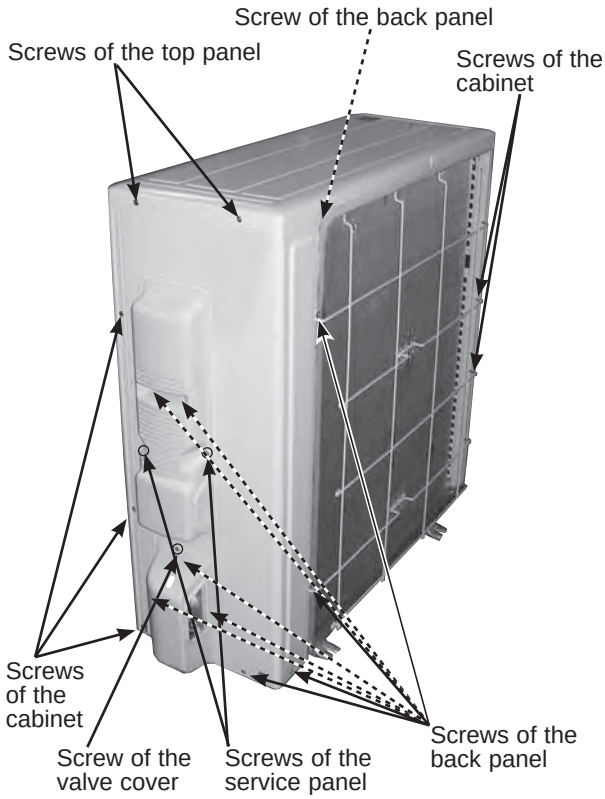 	**Photo 1** 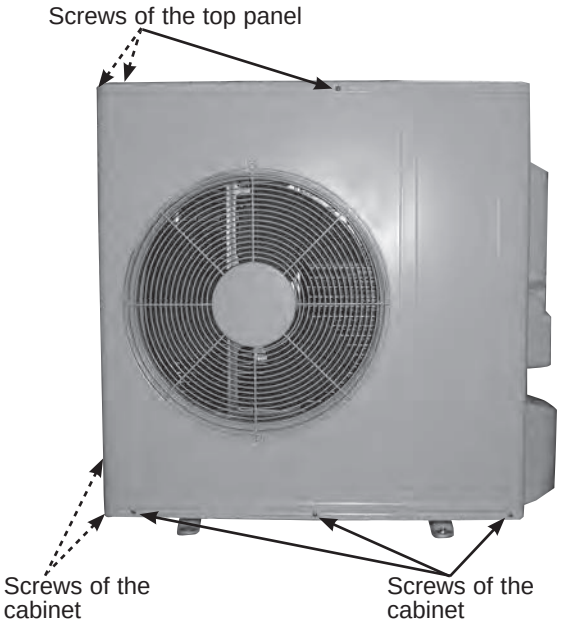

OPERATING PROCEDURE	PHOTOS
2. Removing the inverter assembly, inverter P.C. board and relay P.C. board (1) Remove the cabinet and panels. (Refer to 1.) (2) Disconnect the lead wire to the reactor and the following connectors: <Inverter P.C. board> CN602 (R.V. coil) CN931, CN932 (Fan motor) CN671 (Defrost thermistor, discharge temperature thermistor and outdoor heat exchanger temperature thermistor) CN672 (Ambient temperature thermistor) CN724 (LEV) CN601 (Defrost heater and heater protector) (3) Remove the compressor connector. (4) Remove the screws fixing the relay panel. (5) Remove the relay panel. (6) Remove the earth wires and the lead wires of the inverter P.C. board. (7) Remove the screws of the P.B. support. (8) Remove the inverter P.C. board from the relay panel. (9) Disconnect the following connectors: <Relay P.C. board> CN60 (Terminal block) CN680 (Inverter P.C. board) TAB65 (Inverter P.C. board) TB71 (10) Remove the screws fixing the P.B. holder. (11) Remove the relay P.C. board from the P.B. holder.	**Photo 3** 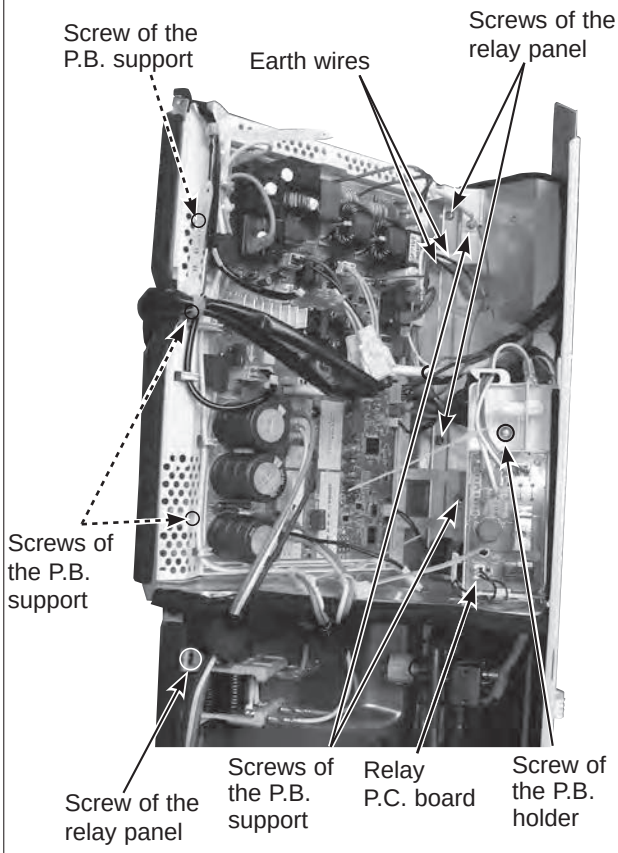 **Photo 4** 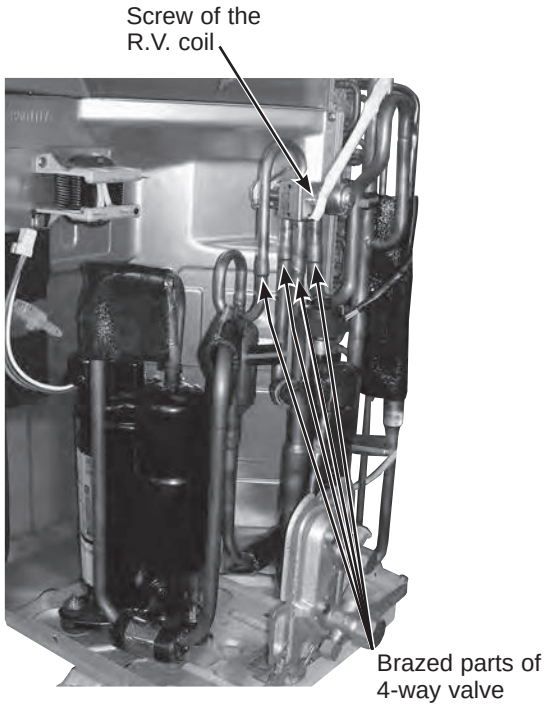
3. Removing R.V. coil (1) Remove the cabinet and panels. (Refer to 1.) (2) Disconnect the following connector: <Inverter P.C. board> CN602 (R.V. coil) (3) Remove the R.V. coil.	

OPERATING PROCEDURE	PHOTOS
4. Removing the discharge temperature thermistor, defrost thermistor, outdoor heat exchanger temperature thermistor and ambient temperature thermistor (1) Remove the cabinet and panels. (Refer to 1.) (2) Disconnect the lead wire to the reactor and the following connectors: <Inverter P.C. board> CN671 (Defrost thermistor, discharge temperature thermistor and outdoor heart exchanger temperature thermistor) CN672 (Ambient temperature thermistor) (3) Pull out the discharge temperature thermistor from its holder. (Photo 7) (4) Pull out the defrost thermistor from its holder. (5) Pull out the outdoor heat exchanger temperature thermistor from its holder. (6) Pull out the ambient temperature thermistor from its holder.	**Photo 5** 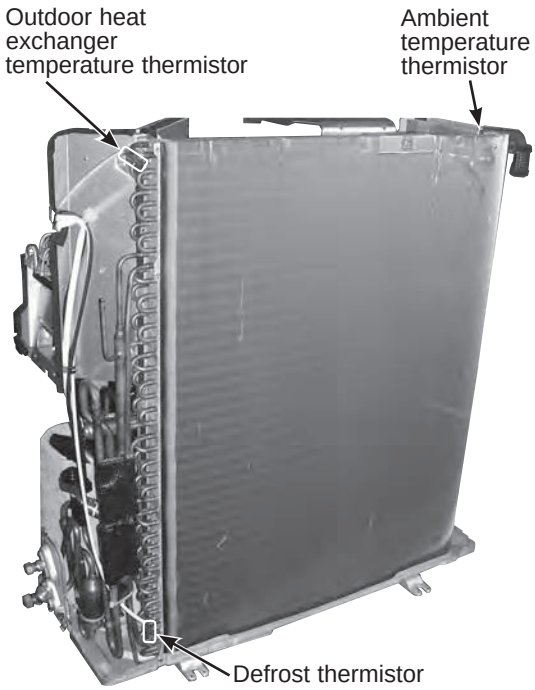
5. Removing outdoor fan motor (1) Remove the top panel, cabinet and service panel. (Refer to 1.) (2) Disconnect the following connectors: <Inverter P.C. board> CN931 and CN932 (Fan motor) (3) Remove the propeller fan. (4) Remove the screws fixing the fan motor. (5) Remove the fan motor.	**Photo 6** 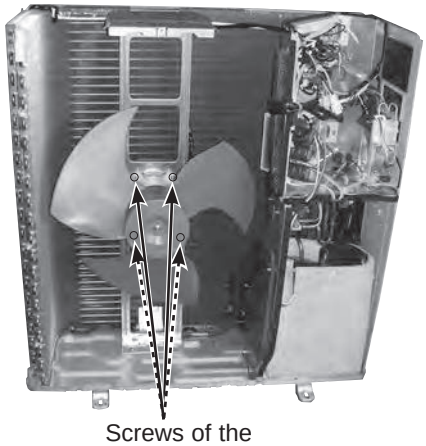
6. Removing the compressor and 4-way valve (1) Remove the top panel, cabinet and service panel. (Refer to 1.) (2) Remove the back panel. (Refer to 1.) (3) Remove the inverter assembly. (Refer to 2.) (4) Recover gas from the refrigerant circuit. **NOTE:** Recover gas from the pipes until the pressure gauge shows 0 kg/cm^2 (0 MPa). (5) Detach the brazed part of the suction and the discharge pipe connected with compressor. (6) Remove the compressor nuts. (7) Remove the compressor. (8) Detach the brazed parts of 4-way valve and pipe. (Photo 4)	**Photo 7** 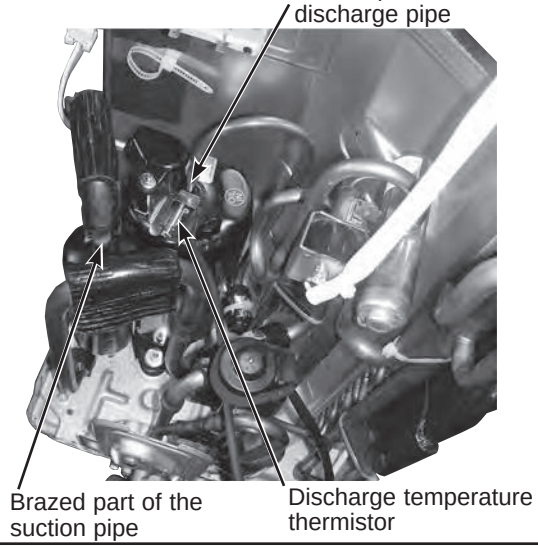

MITSUBISHI ELECTRIC CORPORATION

HEAD OFFICE: TOKYO BLDG., 2-7-3, MARUNOUCHI, CHIYODA-KU, TOKYO 100-8310, JAPAN

© Copyright 2013 MITSUBISHI ELECTRIC CORPORATION

Issued: Mar. 2018. No. OBH668 REVISED EDITION-E
Issued: Jan. 2016. No. OBH668 REVISED EDITION-D
Issued: Aug. 2014. No. OBH668 REVISED EDITION-C
Issued: Jan. 2014. No. OBH668 REVISED EDITION-B
Issued: Oct. 2013. No. OBH668 REVISED EDITION-A
Published: Jun. 2013. No. OBH668
Made in Japan

Specifications are subject to change without notice.